Cisco Unified IP Phone Guide for Cisco Unified Communications Manager 8.5(1) (SCCP and SIP)

For Cisco Unified IP Phone 7975G, 7971G-GE, 7970G, 7965G, and 7945G

Americas Headquarters
Cisco Systems, Inc.
170 West Tasman Drive
San Jose, CA 95134-1706
USA
http://www.cisco.com
Tel: 408 526-4000
800 553-NETS (6387)
Fax: 408 527-0883

Contents

Getting Started 1
Using this Guide 1
Finding Additional Information 2
Accessing Cisco Unified IP Phone 7900 Series eLearning Tutorials 2
Safety and Performance Information 2
Cisco Product Security Overview 3
Accessibility Features 4

Connecting Your Phone 5

An Overview of Your Phone 9
Understanding Buttons and Hardware 9
Understanding Lines and Calls 14
Understanding Line and Call Icons 15
Understanding Phone Screen Features 16
Choosing Phone Screen Items 17
Cleaning and Maintaining the Phone Screen 17
Understanding Feature Buttons and Menus 18
Accessing the Help System on Your Phone 19
Understanding Feature Availability 19
Understanding SIP vs. SCCP 20

Basic Call Handling 21
Placing a Call—Basic Options 21
Placing a Call—Additional Options 22
Answering a Call 24
Ending a Call 26
Using Hold and Resume 26

Using Mute 27
Switching Between Multiple Calls 28
Switching an In-Progress Call to Another Phone 28
Viewing Multiple Calls 29
Transferring Calls 30
Sending a Call to a Voice Message System 31
Forwarding Calls to Another Number 31
Using Do Not Disturb 33
Making Conference Calls 33
Using Conference Features 34
Using Conference 34
Using Join 35
Using cBarge 36
Using Meet-Me 36
Viewing or Removing Conference Participants 37
Placing or Receiving Intercom Calls 37

Advanced Call Handling 39
Speed Dialing 39
Picking Up a Redirected Call on Your Phone 40
Storing and Retrieving Parked Calls 41
Logging Out of Hunt Groups 42
Using a Shared Line 43
Understanding Shared Lines 43
Using Barge to Add Yourself to a Shared-Line Call 43
Understanding Barge Features 44
Using Barge Features 44
Preventing Others from Viewing or Barging a Shared-Line Call 45
Using BLF to Determine a Line State 46
Making and Receiving Secure Calls 47
Tracing Suspicious Calls 49
Prioritizing Critical Calls 49
Using Cisco Extension Mobility 50

Managing Business Calls Using a Single Phone Number 52

Using a Handset, Headset, and Speakerphone 55

Using a Handset 55

Using a Headset 55

Using a Speakerphone 56

Using AutoAnswer with a Headset or Speakerphone 57

Changing Phone Settings 59

Customizing Rings and Message Indicators 59

Customizing the Phone Screen 60

Using Call Logs and Directories 63

Using Call Logs 63

Directory Dialing 65

- Using Corporate Directory on Your Phone 66
- Using Personal Directory on Your Phone 66

Accessing Voice Messages 69

Using the User Options Web Pages 71

Accessing Your User Options Web Pages 71

Configuring Features and Services on the Web 72

- Using the Personal Directory on the Web 72
  - Using Your Personal Address Book on the Web 72
  - Configuring Fast Dials on the Web 73
  - Using the Address Book Synchronization Tool 74
- Setting Up Speed Dials on the Web 74
- Setting Up Phone Services on the Web 75
- Controlling User Settings on the Web 77
- Controlling Line Settings on the Web 77
- Setting Up Phones and Access Lists for Mobile Connect 79
- Using Cisco WebDialer 81

Understanding Additional Configuration Options 83

Troubleshooting Your Phone 85

General Troubleshooting 85

Viewing Phone Administration Data 86

Using the Quality Reporting Tool 87

Cisco One-Year Limited Hardware Warranty Terms 89

Index 91

Getting Started

Using this Guide

This guide provides you with an overview of the features available on your phone. You can read it completely for a solid understanding of your phone's capabilities or refer to the table below for pointers to commonly used sections.

If you want to...	Then...
Explore your phone on your own	Press ? on the phone when you need assistance.
Review safety information	See Safety and Performance Information, page 2.
Connect your phone	See Connecting Your Phone, page 5.
Use your phone after it is installed	Start with An Overview of Your Phone, page 9.
Learn what the button lights mean	See Understanding Buttons and Hardware, page 9.
Learn about the phone screen	See Understanding Phone Screen Features, page 16.
Make calls	See Placing a Call—Basic Options, page 21.
Put calls on hold	See Using Hold and Resume, page 26.
Mute calls	See Using Mute, page 27.
Transfer calls	See Transferring Calls, page 30.
Make conference calls	See Making Conference Calls, page 33.
Set up speed dialing	See Speed Dialing, page 39.
Share a phone number	See Using a Shared Line, page 43.
Use your phone as a speakerphone	See Using a Handset, Headset, and Speakerphone, page 55.
Change the ring volume or tone	See Changing Phone Settings, page 59.
View your missed calls	See Using Call Logs, page 63.
Listen to your voice messages	See Accessing Voice Messages, page 69.
See softkey and icon definitions	Refer to the Quick Reference Card in the front of this guide.

Finding Additional Information

- You can access the most current Cisco Unified IP Phone documentation on the World Wide Web at this URL:

  http://www.cisco.com/en/US/products/hw/phones/ps379/products_user_guide_list.html
- You can access the Cisco website at this URL:

  http://www.cisco.com/
- You can access the most current Licensing Information at this URL:

  http://www.cisco.com/en/US/docs/voice_ip_comm/cuipph/all_models/openssl_license/7900_ssllic.html
- Cisco international websites:

  Allows access to international Cisco websites from www.cisco.com by clicking on the Worldwide [change] link at the top of the web page.

Accessing Cisco Unified IP Phone 7900 Series eLearning Tutorials

(SCCP phones only)

The Cisco Unified IP Phone 7900 Series eLearning tutorials use audio and animation to demonstrate basic calling features. You can access eLearning tutorials online (for several phones) from your personal computer. Look for the eLearning tutorial (English only) for your phone in the documentation list at the following location:

http://www.cisco.com/en/US/products/hw/phones/ps379/products_user_guide_list.html

Note Although an eLearning tutorial may not be available for your specific Cisco Unified IP Phone, refer to the Cisco Unified IP Phone 7900 Series eLearning tutorials for an overview of common IP phone features and functionality.

Safety and Performance Information

Refer to these sections for information about the impact of power outages and other devices on your Cisco Unified IP Phone.

Power Outage

Your accessibility to emergency service through the phone is dependent on the phone being powered. If there is an interruption in the power supply, Service and Emergency Calling Service dialing will not function until power is restored. In the case of a power failure or disruption, you may need to reset or reconfigure equipment before using the Service or Emergency Calling Service dialing.

Using External Devices

When you use external devices with the Cisco Unified IP Phone, Cisco recommends the use of good-quality external devices, such as headsets, that are shielded against unwanted radio-frequency (RF) and audio -requency (AF) signals.

Depending on the quality of these devices and their proximity to other devices, such as mobile phones or two-way radios, some audio noise may still occur. In these cases, Cisco recommends that you take one or more of these actions:

- Move the external device and its cables away from the source of the RF or AF signals.
- Use shielded cables for the external device, or use cables with a better shield and connector.
- Shorten the length of the external device cable.
- Apply ferrites or other such devices on the cables for the external device.

Cisco cannot guarantee the performance of the system because Cisco has no control over the quality of external devices, cables, and connectors. The system will perform adequately when suitable devices are attached using good quality cables and connectors.

Caution In European Union countries, use only external speakers, microphones, and headsets that are fully compliant with the EMC Directive (89/336/EC).

Cisco Product Security Overview

This product contains cryptographic features and is subject to United States and local country laws governing import, export, transfer and use. Delivery of Cisco cryptographic products does not imply third-party authority to import, export, distribute or use encryption. Importers, exporters, distributors and users are responsible for compliance with U.S. and local country laws. By using this product you agree to comply with applicable laws and regulations. If you are unable to comply with U.S. and local laws, return this product immediately.

Further information regarding U.S. export regulations may be found at this URL:

http://www.access.gpo.gov/bis/ear/ear_data.html

Accessibility Features

The Cisco Unified IP Phone 7900 Series provides accessibility features for the vision impaired, the blind, and the hearing and mobility impaired.

For detailed information about the features on these phones, see Accessibility Features for the Cisco Unified IP Phone 7900 Series.

You can also find more information about accessibility at this Cisco website:

http://www.cisco.com/web/about/responsibility/accessibility/index.html

Connecting Your Phone

Your system administrator will likely connect your new Cisco Unified IP Phone to the corporate IP telephony network. If that is not the case, refer to the graphic and table below to connect your phone.

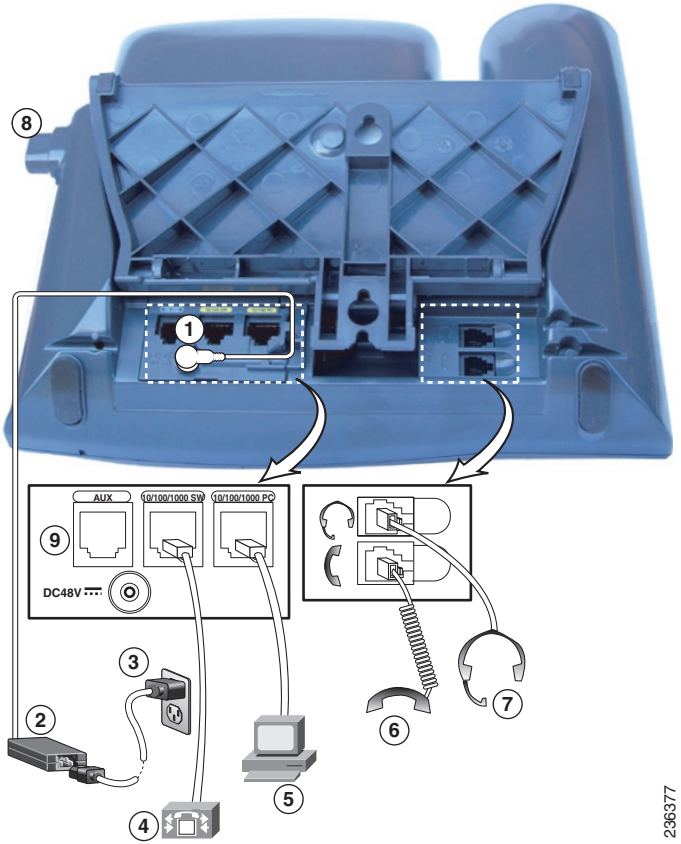

1	DC adaptor port	**2**	AC-to-DC power supply
3	AC power cord	**4**	Network port

5	Access port	**6**	Handset port
7	Headset port	**8**	Footstand button
9	Auxiliary port		

Removing the Hookswitch Clip (Required)

Some phones ship with a clip to secure the hookswitch. Before you use your phone, remove the hookswitch clip (if present) from the cradle area. With the clip removed, the hookswitch lifts slightly when you pick up the handset.

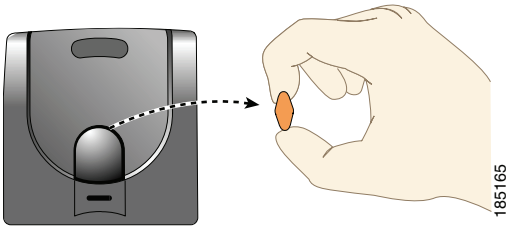

Adjusting the Handset Rest (Optional)

Cisco recommends adjusting the handset rest, particularly when wall-mounting the phones, as this will ensure that the receiver will not readily slip out of the cradle. See the table below for instructions.

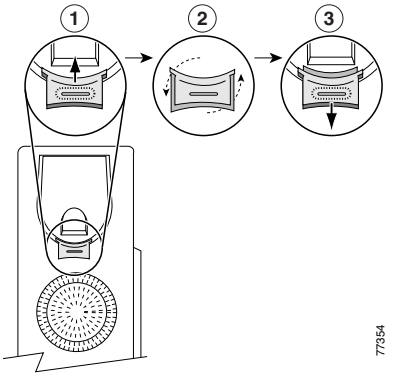

1	Set the handset aside and pull the square plastic tab from the handset rest.
2	Rotate the tab 180 degrees.
3	Slide the tab back into the handset rest. An extension protrudes from the top of the rotated tab. Return the handset to the handset rest.

Adjusting the Footstand (Optional)

To change the angle of the phone base, adjust the footstand while pressing the footstand button.

Registering with TAPS

After your phone is connected to the network, your system administrator may ask you to auto-register your phone using TAPS (Tool for Auto-Registered Phones Support). TAPS may be used either for a new phone or to replace an existing phone.

To register with TAPS, pick up the handset, enter the TAPS extension provided by your system administrator, and follow the voice prompts. You may need to enter your entire extension, including the area code. After your phone displays a confirmation message, hang up. The phone will restart.

Using a Headset

You can use a wired headset with your Cisco Unified IP Phone. If you use a Cisco Unified IP Phone 7975G, 7965G, or 7945G, you can use a wireless headset in conjunction with the wireless headset remote hookswitch control feature.

Headset Support

Although Cisco Systems performs limited internal testing of third-party headsets for use with the Cisco Unified IP Phones, Cisco does not certify or support products from headset (or handset) vendors.

Cisco recommends the use of good quality external devices, for example, headsets that are screened against unwanted radio frequency (RF) and audio frequency (AF) signals. Depending on the quality of these devices and their proximity to other devices such as mobile phones and two-way radios, some audio noise or echo may still occur. An audible hum or buzz may be heard by either the remote party or by both the remote party and the Cisco Unified IP Phone user. Humming or buzzing sounds can be caused by a range of outside sources: for example, electric lights, electric motors, or large PC monitors. See Using External Devices, page 3, for more information.

Note In some cases, hum may be reduced or eliminated by using a local power cube or power injector.

These environmental and hardware inconsistencies in the locations where Cisco Unified IP Phones are deployed means that there is not a single headset solution that is optimal for all environments.

Cisco recommends that customers test headsets in their intended environment to determine performance before making a purchasing decision and deploying en masse.

Audio Quality Subjective to the User

Beyond the physical, mechanical and technical performance, the audio portion of a headset must sound good to the user and to the party on the far end. Sound quality is subjective and Cisco cannot guarantee the performance of any headsets However, a variety of headsets from leading headset manufacturers have been reported to perform well with Cisco Unified IP Phones. See manufacturer's sites for details.

For information about wireless headsets that work in conjunction with the wireless headset remote hookswitch control feature, go to the following URL: http://www.cisco.com/pcgi-bin/ctdp/Search.pl

1. From the **Enter Solution** drop-down menu, choose **IP Communications**. The **Select a Solution Category** menu displays.
2. Choose **IP Phone Headsets** to see a list of Technology Development Program partners.

If you want to search for a particular Technology Development Program partner, enter the partner's name in the Enter Company Name box.

An Overview of Your Phone

Cisco Unified IP Phones are full-feature telephones that provide voice communication over the data network that your computer uses, allowing you to place and receive phone calls, put calls on hold, transfer calls, make conference calls, and so on.

In addition to basic call-handling features, your Cisco Unified IP Phone can provide enhanced productivity features that extend your call-handling capabilities. Depending on the configuration, your phone supports:

- Access to network data, XML applications, and web-based services.
- Online customizing of phone features and services from your Cisco Unified CM User Options web pages.
- A comprehensive online help system that displays information on the phone screen.

Understanding Buttons and Hardware

To identify buttons and hardware on your phone, refer to the graphics and table below.

Cisco Unified IP Phone 7975G

Cisco Unified IP Phone 7970G and 7971G-GE

Cisco Unified IP Phone 7965G

Cisco Unified IP Phone 7945G

	Item	Description	For more information, see...
1	Programmable buttons	Depending on configuration, programmable buttons provide access to: • Phone lines (line buttons) and intercom lines • Speed-dial numbers (speed-dial buttons, including the BLF speed-dial feature) • Web-based services (for example, a Personal Address Book button) • Call features (for example, a Privacy, Hold, or Transfer button) Buttons illuminate to indicate status: Green, steady—Active call or two-way intercom call Green, flashing—Held call Amber, steady—Privacy in use, one-way intercom call, DND active, or logged into Hunt Group Amber, flashing—Incoming call or reverting call Red, steady—Remote line in use (shared line, BLF status or active Mobile Connect call)	• Understanding Lines and Calls, page 14 • Basic Call Handling, page 21 • Speed Dialing, page 39 • Using a Shared Line, page 43 • Using BLF to Determine a Line State, page 46 • Placing or Receiving Intercom Calls, page 37
2	Footstand button	Enables you to adjust the angle of the phone base.	Adjusting the Footstand (Optional), page 7

3	Display button	Cisco Unified IP Phone 7975G, 7971G-GE, and 7970G. Awakens the phone screen from sleep mode or disables the touchscreen feature for cleaning. No color—Ready for input Green flashing—Disabled Green steady—Sleep mode Cisco Unified IP Phone 7965G and 7945G: Awakens the phone screen from sleep mode. No color—Ready for input Green steady—Sleep mode	Cleaning and Maintaining the Phone Screen, page 17
4	Messages button	Auto-dials your voice message service (varies by service).	Accessing Voice Messages, page 69
5	Directories button	Opens/closes the Directories menu. Use it to access call logs and directories.	Using Call Logs, page 63
6	Help button	Activates the Help menu.	Accessing the Help System on Your Phone, page 19
7	Settings button	Opens/closes the Settings menu. Use it to change phone screen and ring settings.	Changing Phone Settings, page 59
8	Services button	Opens/closes the Services menu.	Using the User Options Web Pages, page 71
9	Volume button	Controls the handset, headset, and speakerphone volume (off-hook) and the ringer volume (on-hook).	Using a Handset, Headset, and Speakerphone, page 55
10	Speaker button	Toggles the speakerphone on or off. When the speakerphone is on, the button is lit.	Using a Handset, Headset, and Speakerphone, page 55
11	Mute button	Toggles the microphone on or off. When the microphone is muted, the button is lit.	Using Mute, page 27
12	Headset button	Toggles the headset on or off. When the headset is on, the button is lit.	Using a Handset, Headset, and Speakerphone, page 55

13	4-way navigation pad and Select button (center)	Cisco Unified IP Phone 7975G, 7965G, and 7945G: Enables you to scroll through menus and highlight items. Use the Select button to select an item that is highlighted on the screen. Navigation button—Scroll up and down to see menus and highlight items and right and left across multi-column displays. Select button—Scroll to highlight a line using the Navigation button and then press to open a menu, play a ringer item, or access other features, as described on the screen.	Choosing Phone Screen Items, page 17
14	Navigation button	Cisco Unified IP Phone 7971G-GE and 7970G: Enables you to scroll through menus and highlight items. When the phone is on-hook, displays phone numbers from your Placed Calls log.	Using Call Logs, page 63
15	Keypad	Enables you to dial phone numbers, enter letters, and choose menu items.	Basic Call Handling, page 21
16	Softkey buttons	Each activates a softkey option (displayed on your phone screen).	Understanding Phone Screen Features, page 16
17	Handset light strip	Indicates an incoming call or new voice message.	Accessing Voice Messages, page 69
18	Phone screen	Shows phone features.	Understanding Phone Screen Features, page 16

Understanding Lines and Calls

To avoid confusion about lines and calls, refer to these descriptions:

- Lines—Each corresponds to a directory number or intercom number that others can use to call you. Your phone can support up to eight lines, depending on your phone and configuration. To see your phone lines, look at the right side of your phone screen. You have as many lines as you have directory numbers and phone line icons: .
- Calls—Each line can support multiple calls. By default, your phone supports four connected calls per line, but your system administrator can adjust this number according to your needs. Only one call can be active at any time; other calls are automatically placed on hold.

Understanding Line and Call Icons

Your phone displays icons to help you determine the line and call state.

Icon	Line or call state	Description
	On-hook line	No call activity on this line.
	Off-hook line	You are dialing a number or an outgoing call is ringing.
	Connected call	You are connected to the other party.
	Ringing call	A call is ringing on one of your lines.
	Call on hold	You have put the call on hold. See Using Hold and Resume, page 26.
	Remote-in-use	Another phone that shares your line has a connected call. See Using a Shared Line, page 43.
	Reverting call	A holding call is reverting to your phone. See Using Hold and Resume, page 26.
	Authenticated call	See Making and Receiving Secure Calls, page 47.
	Encrypted call	See Making and Receiving Secure Calls, page 47.
	BLF- monitored line is idle	See Using BLF to Determine a Line State, page 46.
	BLF- monitored line is in-use	See Using BLF to Determine a Line State, page 46.
	BLF- monitored line is ringing (BLF Pickup)	See Using BLF to Determine a Line State, page 46.
	Line in Do Not Disturb (BLF feature)	See Using BLF to Determine a Line State, page 46.
	Idle Intercom line	The intercom line is not in use. See Placing or Receiving Intercom Calls, page 37.
	One-way intercom call	The intercom line is sending or receiving one-way audio. See Placing or Receiving Intercom Calls, page 37.
	Two-way intercom call	The recipient pressed the intercom line to activate two-way audio with the caller. See Placing or Receiving Intercom Calls, page 37.

Understanding Phone Screen Features

This is what your main phone screen may look like with an active call.

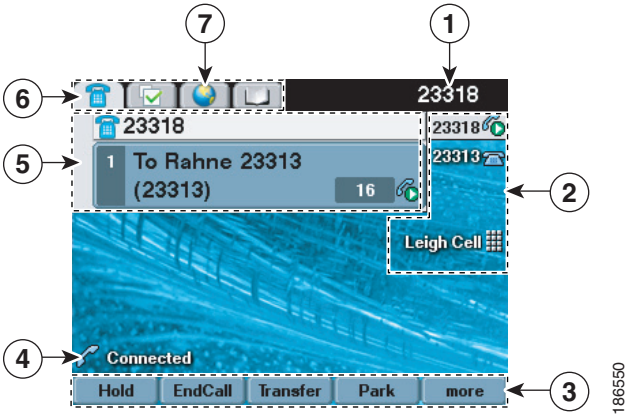

1	Primary phone line	Displays the phone number (directory number) for your primary phone line. When several feature tabs are open, the phone number and the time and date display alternately in this area.
2	Programmable buttons	Serve as phone line buttons, intercom line buttons, speed-dial buttons, phone service buttons or phone feature buttons. Icons and labels indicate how these buttons are configured. For an icon reference, see Phone Screen Icons, page 2.
3	Softkey labels	Displays a softkey function for the corresponding softkey button.
4	Status line	Displays audio mode icons, status information, and prompts.
5	Call activity area	Displays current calls per line, including caller ID, call duration, and call state for the highlighted line (standard view). See Understanding Line and Call Icons, page 15, and Viewing Multiple Calls, page 29.
6	Phone tab	Indicates call activity.
7	Feature tabs	Indicates an open feature menu. See Understanding Feature Buttons and Menus, page 18.

Note The Messages, Directories, and Services screens on your phone may appear in Normal mode or in Wide mode depending on how your phone has been set up. A phone window in Wide mode spans the entire width of the phone screen. However, neither you nor your administrator can adjust the phone screen viewing mode.

Choosing Phone Screen Items

There are different ways to choose items on your phone's screen.

To choose a phone screen item...	Do this...
By touch (Cisco Unified IP Phone 7975G, 7971G-GE, and 7970G only)	Press (or tap) touch-sensitive items on the touchscreen with your fingertip. Use only your fingertip to press the touchscreen, as using any other objects could damage the display. Be aware that pressing a phone number can cause the phone to dial the number.
By item number	Press the corresponding number on your keypad. For example, press **4** to choose the fourth item in a menu.
By scrolling	Use the Navigation button to highlight an item. Press the Select button to select the item, or a softkey to finish the action.

Cleaning and Maintaining the Phone Screen

Cisco Unified IP Phone 7975G, 7971G-GE, and 7970G

Use only a soft, dry cloth to wipe the touchscreen. Do not use any liquids or powders on the phone, as they can contaminate phone components and cause failures.

Use the Display button to disable and enable the touchscreen for cleaning. The Display button illuminates to indicate changes in touchscreen status:

- Green, steady—Touchscreen is in sleep mode
- Green, flashing—Touchscreen is disabled

If you want to...	Then...
Disable the touchscreen for cleaning	Press and hold for more than one second. flashes. The screen remains disabled for about a minute, unless you enable it.
Enable the touchscreen (after disabling it)	Press (flashing) and hold for more than one second.
Wake the touchscreen from sleep mode	Press the touchscreen or any button, or lift the handset. After a period of inactivity (determined by your system administrator), the touchscreen enters sleep mode to save power. In this mode, the touchscreen appears blank and the Display button remains lit.

Cisco Unified IP Phone 7965G and 7945G

Use only a soft, dry cloth to wipe the phone screen. Do not use any liquids or powders on the phone, as they can contaminate phone components and cause failures.

If you want to...	Then...
Wake the phone screen from sleep mode	Press any button or lift the handset. After a period of inactivity (determined by your system administrator), the phone screen enters sleep mode to save power. In this mode, the phone screen appears blank and the Display button remains lit.

Understanding Feature Buttons and Menus

Press a feature button to open or close a feature menu.

If you want to...	Then...
Open or close a feature menu	Press a feature button: Messages Services Help Directories Settings
Scroll through a list or menu	Press the Navigation button.
Go back one level in a feature menu	Press **Exit**. Pressing Exit from the top level of a menu closes the menu.
Switch between open feature menus	Press a feature tab. Each feature menu has a corresponding tab. The tab is visible when the feature menu is open.

Accessing the Help System on Your Phone

Your phone provides a comprehensive online help system. Help topics appear on the phone screen.

If you want to...	Then...
View the main menu	Press ? on your phone and wait a few seconds for the menu to display. Main menu topics include: • About Your Cisco Unified IP Phone—Details about your phone • How do I...?—Procedures for common phone tasks • Calling Features—Descriptions and procedures for calling features
Learn about a button or softkey	Press ?, then quickly press a button or softkey.
Learn about a menu item	Press ✉, 📖, or 🌐 to display a feature menu. Highlight a menu item, then press ? twice quickly.
Get help using Help	Press ?. After a second or two, press ? again, or choose **Help** from the main menu.

Understanding Feature Availability

Depending on your phone system configuration, features included in this phone guide may not be available to you or may work differently on your phone. For additional information about feature operation or availability, contact your support desk or system administrator.

You can access many features by either using a softkey or pressing a line button. Although you can configure some features, your system administrator controls most of them.

Here are some details about using softkeys and line buttons to access features:

Feature	Softkey	Line Button Label and Icon
Call Back	CallBack	**CallBack**
Call Forward	CFwdALL	**Forward All**
Call Park	Park	**Park**
Call PickUp	PickUp	**PickUp**
Conference	Confrn	**Conference**
Conference List	ConfList	**Conference List**
Do Not Disturb	DND	**Do Not Disturb** or Do Not Disturb
End Call	EndCall	**End Call**

Feature	Softkey	Line Button Label and Icon
Group Pickup	GPickUp	**Group PickUp**
Hold	Hold	Hold
Hunt Group	HLog	**Hunt Group** or **Hunt Group**
Malicious Call Identification	MCID	**Malicious Call ID**
Meet Me Conferencing	MeetMe	**MeetMe**
Mobility	Mobility	**Mobility**
New Call	New Call	**New Call**
Other PickUp	OPickUp	**Other PickUp**
Quality Reporting Tool	QRT	**Quality Reporting Tool**
Redial	Redial	**Redial**
Remove Last Conference Party	RmLstC	**Remove Last Participant**
Transfer	Transfer	**Transfer**
Video Support	VidMode	**Video**

Understanding SIP vs. SCCP

Your phone can be configured to work with one of two signaling protocols: SIP (Session Initiation Protocol) or SCCP (Skinny Call Control Protocol). Your system administrator determines this configuration.

Phone features can vary depending on the protocol. This Phone Guide indicates which features are protocol-specific. To learn which protocol your phone is using, you can ask your system administrator or you can choose > **Model Information > Call Control Protocol** on your phone.

Basic Call Handling

You can perform basic call-handling tasks using a range of features and services. Feature availability can vary; see your system administrator for more information.

Placing a Call—Basic Options

Here are some easy ways to place a call on your Cisco Unified IP Phone.

If you want to...	Then...	For more information, see...
Place a call using the handset	Pick up the handset and enter a number.	An Overview of Your Phone, page 9
Place a call using the speakerphone	Press and enter a number.	Using a Handset, Headset, and Speakerphone, page 55
Place a call using a headset	Press and enter a number. Or, if is lit, press **New Call** and enter a number.	Using a Handset, Headset, and Speakerphone, page 55
Redial a number	Press **Redial** to dial the last number, or press the Navigation button (with the phone idle) to see your Placed Calls.	Using Call Logs, page 63
Place a call while another call is active (using the same line)	**1.** Press **Hold**. **2.** Press **New Call**. **3.** Enter a number.	Using Hold and Resume, page 26
Dial from a call log	**1.** Choose > **Missed Calls**, **Received Calls**, or **Placed Calls**. **2.** Select the listing or scroll to it and go off-hook.	Using Call Logs, page 63

Tips

- You can dial on-hook, without a dial tone (pre-dial). To pre-dial, enter a number, then go off-hook by lifting the handset, or pressing **Dial**, , or .

- When you pre-dial, your phone tries to anticipate the number you are dialing by displaying matching numbers (if available) from your Placed Calls log. This is called Auto Dial. To call a number displayed with Auto Dial, press the number, or scroll to it and go off-hook.
- If you make a mistake while dialing, press **<<** to erase digits.
- If parties on a call hear a beep tone, the call may be monitored or recorded. Ask your system administrator for more information.
- Your phone may be set up for international call logging, which is indicated by a "+" symbol on the call logs, redial, or call directory entries. See your system administrator for more information.

Placing a Call—Additional Options

You can place calls using special features and services that may be available on your phone. See your system administrator for more information about these additional options.

If you want to...	**Then...**	**For more information, see...**
Place a call while another call is active (using a different line)	**1.** Press for a new line. The first call is automatically placed on hold. **2.** Enter a number.	Using Hold and Resume, page 26
Speed dial a number	Do one of these: • Press (a speed-dial button). • Use the Abbreviated Dial feature. • Use the Fast Dial feature.	Speed Dialing, page 39
Dial from a corporate directory on your phone	**1.** Choose **> Corporate Directory** (name can vary). **2.** Enter a name and press **Search**. **3.** Highlight a listing and go off-hook.	Using Call Logs, page 63
Dial from a corporate directory on your personal computer using Cisco WebDialer	**1.** Open a web browser and go to a WebDialer-enabled corporate directory. **2.** Click the number that you want to dial.	Setting Up Phones and Access Lists for Mobile Connect, page 79

If you want to...	Then...	For more information, see...
Use **CallBack** to receive notification when a busy or ringing extension is available	**1.** Press **CallBack** while listening to the busy tone or ring sound. **2.** Hang up. Your phone alerts you when the line is free. **3.** Place the call again. **Note** The CallBack feature is disabled on a Call Chaperone user's Cisco Unified IP Phone when the calls are being chaperoned.	Your system administrator
See if a line associated with a speed-dial, call record, or directory listing is busy before placing a call to that line	Look for Busy Line Feature indicators.	Using BLF to Determine a Line State, page 46
Make a priority (precedence) call (SCCP phones only)	Enter the MLPP access number and then enter a phone number.	Prioritizing Critical Calls, page 49
Dial from a Personal Address Book (PAB) entry	**1.** Choose > **Personal Directory** to log in. **2.** Choose **Personal Address Book** and search for a listing.	Using Personal Directory on Your Phone, page 66
Place a call using a billing or tracking code (SCCP phones only)	**1.** Dial a number. **2.** After the tone, enter a client matter code (CMC) or a forced authorization code (FAC).	Your system administrator
Place a call using your Extension Mobility profile	Log in to the Extension Mobility service on a phone.	Using Cisco Extension Mobility, page 50
Make a call from a mobile phone using Mobile Voice Access	**1.** Obtain your Mobile Voice Access number and end-user PIN from your system administrator. **2.** Dial your assigned Mobile Voice access number. **3.** Enter your mobile phone number, if requested, and the PIN. **4.** Press **1** to make a call to an enterprise IP phone. **5.** Dial a desktop phone number other than your desktop phone number).	Managing Business Calls Using a Single Phone Number, page 52

If you want to...	Then...	For more information, see...
Place a call using Fast Dial	**Note** Before using this option, your system administrator must configure this feature and assign a service URL to the line button. Contact your system administrator for more information. **1.** Press the Fast Dial line button. **2.** To find and select an entry, scroll to or press the index number. The system dials the specified number.	Configuring Fast Dials on the Web, page 73
Place a call using your PAB	**Note** Before using this option, your system administrator must configure this feature and assign a service URL to the line button. Contact your system administrator for more information. **1.** Press the PAB line button. **2.** Access the contact and select the number. The system dials the specified number.	Using Your Personal Address Book on the Web, page 72

Answering a Call

You can answer a call by lifting the handset, or you can use other options if they are available on your phone.

If you want to...	Then...	For more information, see...
Answer with a headset	Press , if unlit. Or, if is lit, press **Answer** or (flashing). **Note** The ringing line is selected automatically. Contact your system administrator for the options to select the primary line each time. If you are using a wireless headset, refer to the wireless headset documentation.	Using a Handset, Headset, and Speakerphone, page 55

If you want to...	Then...	For more information, see...
Answer with the speakerphone	Press , **Answer**, or (flashing). **Note** The ringing line is selected automatically. Contact your system administrator for the options to select the primary line each time.	Using a Handset, Headset, and Speakerphone, page 55
Switch from a connected call to answer a new call	Press **Answer** or, if the call is ringing on a different line, press (flashing).	Using Hold and Resume, page 26
Answer using call waiting	Press **Answer**.	Using Hold and Resume, page 26
Send a call to a voice message system	Press **iDivert**.	Sending a Call to a Voice Message System, page 31
Auto-connect calls	Use AutoAnswer.	Using AutoAnswer with a Headset or Speakerphone, page 57
Retrieve a parked call on another phone	Use Call Park, Directed Call Park, or Assisted Directed Call Park.	Storing and Retrieving Parked Calls, page 41
Use your phone to answer a call ringing elsewhere	Use Call Pickup.	Picking Up a Redirected Call on Your Phone, page 40
Answer a priority call (SCCP phones only)	Hang up the current call and press **Answer**.	Prioritizing Critical Calls, page 49
Answer a call on your mobile phone or other remote destination	Set up Mobile Connect and answer your phone. When you enable Mobile Connect and answer the call on your mobile phone and you have up to four IP Phones or Softphone configured as shared lines, the additional phones stop flashing.	Managing Business Calls Using a Single Phone Number, page 52

Tips

- If parties on a call hear a beep tone, the call may be monitored or recorded. Ask your system administrator for more information.
- If you work in a contact center or similar environment, you can create, update, and delete your own prerecorded greeting that plays automatically if Agent Greeting is configured for your phone. For more information, see your system administrator.
- A Call Chaperone user cannot answer an incoming call when the calls are being chaperoned.

Ending a Call

To end a call, simply hang up. Here are some more details.

If you want to...	Then...
Hang up while using the handset	Return the handset to its cradle. Or press **EndCall**.
Hang up while using a headset	Press . Or, to keep headset mode active, press **EndCall**. Cisco Unified IP Phone 7975G, 7965G, and 7945G support a wireless headset. If you are using a wireless headset, refer to the wireless headset documentation for instructions.
Hang up while using the speakerphone	Press or **EndCall**.
Hang up one call, but preserve another call on the same line	Press **EndCall**. If necessary, remove the call from hold first.

Using Hold and Resume

You can hold and resume calls. When you put a call on hold, the Hold icon appears on the right in the call information area and the corresponding line button flashes green . With a shared line, the line button flashes green when you place a call on hold, and the phone displays the hold icon. When another phone places a call on hold, the line button flashes red, and the phone displays the remote hold icon.

If the Hold Reversion feature is enabled for your phone, a call that you put on hold reverts to ringing after a certain time. The "reverting" call remains on hold until you resume it or until Hold Reversion times out. Your phone indicates the presence of a reverting call by the following:

- Alerting you at intervals with a single ring (or flash or beep, depending on your phone line setting).
- Briefly displaying a "Hold Reversion" message in the status bar at the bottom of the phone screen.
- Displaying the animated Hold Reversion icon next to the caller ID for the held call.
- Displaying a flashing amber line button (depending on the line state).

If you want to...	Then...
Put a call on hold	**1.** Make sure the appropriate call is highlighted. **2.** Press **Hold**.
Remove a call from hold on the current line	**1.** Make sure the appropriate call is highlighted. **2.** Press **Resume**.

If you want to...	Then...
Remove a call from hold on a different line	**1.** Press the appropriate line button: or (flashing). Doing so may cause a held call to resume automatically: • If there is a reverting call on the line, that call will resume. • If there is more than one reverting call on the line, the oldest reverting call will resume. • If a non-reverting held call is the only call on the line, it will resume. **2.** If necessary, scroll to the appropriate call and press **Resume**.

Tips

- Engaging the Hold feature typically generates music or a beeping tone.
- If you receive an alert for an incoming call and a reverting call at the same time, by default your phone will shift the focus of the phone screen to display the incoming call. Your system administrator can change this focus priority setting.
- If you use a shared line, Hold Reversion rings only on the phone that put the call on hold, not on the other phones that share the line.
- The duration between Hold Reversion alerts is determined by your system administrator.
- The Hold feature is disabled on a Call Chaperone user's Cisco Unified IP Phone when the calls are being chaperoned.

Using Mute

With Mute enabled, you can hear other parties on a call but they cannot hear you. You can use Mute with the handset, speakerphone, or a headset.

If you want to...	Then...
Toggle Microphone on	Press .
Toggle Microphone off	Press .

Switching Between Multiple Calls

You can switch between multiple calls on one or more lines. If the call that you want to switch to is not automatically highlighted, use the Navigation button to scroll to it.

If you want to...	Then...
Switch between connected calls on one line	**1.** Make sure the call that you want to switch to is highlighted. **2.** Press **Resume**. Any active call is placed on hold and the selected call is resumed.
Switch between connected calls on different lines	Press for the line that you are switching to. If a single call is holding on the line, the call automatically resumes. If multiple calls are holding, highlight the appropriate call and press **Resume**.
Switch from a connected call to answer a ringing call	Press **Answer**, or if the call is ringing on a different line, press (flashing). Any active call is placed on hold and the selected call is resumed.

Switching an In-Progress Call to Another Phone

You can switch in-progress calls between the desktop phone and your mobile phone or other remote destination.

If you want to...	Then...
Switch an in-progress call on your desktop phone to a mobile phone	**1.** Press the **Mobility** softkey and select **Send call to mobile**. **2.** Answer the in-progress call on your mobile phone. The desktop phone line button turns red and the handset icons and the calling party number appear on the phone display. You cannot use same phone line for any other calls, but if your desk phone supports multiple lines, you can use another line to make or receive calls.
Switch an in-progress call from a mobile phone to your desktop phone	**1.** Hang up the call on your mobile phone to disconnect the mobile phone, but not the call. **2.** Press the **Resume** softkey on your desk phone within four seconds and start talking on the desk phone.

If you want to...	Then...
Switch an in-progress call from a mobile phone to a desk phone sharing the same line (Session Handoff)	**1.** While on your mobile phone, press the access code for the Session Handoff feature (for example, *74). See your system administrator for a list of access codes. **2.** Hang up the call on your mobile phone to disconnect the mobile phone, but not the call. **3.** Press the **Answer** softkey on your desk phone within 10 seconds and start talking on the desk phone. The number of seconds to answer the call on your desk phone is set by your system administrator. The other Cisco Unified devices that share the same line display a Remote in Use message. The number of seconds to resume the call depends on the configuration set by the system administrator.

Viewing Multiple Calls

Understanding how multiple calls are displayed on your phone can help you organize your call-handling efforts.

In standard viewing mode, your phone displays calls as follows for the highlighted line:

- Calls with the highest precedence and longest duration display at the top of the list.
- Calls of a similar type are grouped together. For example, calls that you have interacted with are grouped near the top, and calls on hold are grouped last.

You can use these additional methods to view multiple calls on multiple lines:

If you want to...	Then...
View calls on another line	**1.** Press ?. **2.** Immediately press the line button.
Switch to call overview mode	Press for the highlighted line. The phone switches to call overview mode, displaying only one call per line. The displayed call is either the active call or the held call with the longest duration. To return to standard viewing mode, press ?, then immediately press the line button.

Transferring Calls

Transfer redirects a connected call. The *target* is the number to which you want to transfer the call.

If you want to...	Then...
Transfer a call without talking to the transfer recipient	**1.** From an active call, press **Transfer.** **2.** Enter the target number. **3.** Press **Transfer** again to complete the transfer or **EndCall** to cancel. **Note** If your phone has on-hook transfer enabled, complete the transfer by hanging up.
Talk to the transfer recipient before transferring a call (consult transfer)	**1.** From an active call, press **Transfer.** **2.** Enter the target number. **3.** Wait for the transfer recipient to answer. **4.** Press **Transfer** again to complete the transfer or **EndCall** to cancel. **Note** If your phone has on-hook transfer enabled, complete the transfer by hanging up.
Redirect a call to a voice message system	Press **iDivert**. For more information, see Sending a Call to a Voice Message System, page 31.

Tips

- If on-hook transfer is enabled on your phone, you can either hang up to complete the call, or press **Transfer** and then hang up.
- If on-hook transfer is *not* enabled on your phone, hanging up without pressing **Transfer** again places the call on hold.
- You cannot use **Transfer** to redirect a call on hold. Press **Resume** to remove the call from hold before transferring it.
- The Transfer feature is disabled on a Call Chaperone user's Cisco Unified IP Phone when the calls are being chaperoned.

Sending a Call to a Voice Message System

You can use **iDivert** to send an active, ringing, or on-hold call to your voice message system. Depending on the type of call and your phone configuration, you can also use **iDivert** to send the call to another party's voice message system.

If you want to...	Then...
Send an active, ringing, or on-hold call to a voice message system	Press **iDivert**. You see one of these results: • The call is transferred to your voice message system. • Your phone screen displays a menu that enables you to choose between your voice message system or the voice message system of the original called party. Choose an option to redirect the call.

Tips

- If your phone displays a menu that disappears before you make your selection, you can press **iDivert** again to re-display the menu. You can also ask your system administrator to configure a longer timeout value.
- If the call was originally sent to someone else's phone, **iDivert** enables you to redirect the call either to your own voice message system or to the original called party's voice message system. Your system administrator must make this option available to you.
- If the call was sent to you directly (not transferred or forwarded to you), or if your phone does not support the option described above, using **iDivert** redirects the call to your voice message system.
- When you switch an in-progress call from your mobile phone to Cisco Unified devices that share the same line (Session Handoff), the iDivert feature is disabled on the Cisco Unified devices. The iDivert feature returns when the call ends.

Forwarding Calls to Another Number

You can use the call forwarding features to redirect incoming calls from your phone to another number.

Your system administrator may allow you to choose from two types of call forwarding features:

- Unconditional call forwarding (Call Forward All)—Applies to all calls that you receive.
- Conditional call forwarding (Call Forward No Answer, Call Forward Busy, Call Forward No Coverage)—Applies to certain calls that you receive, according to conditions.

You can access Call Forward All on your phone or from your Cisco Unified CM User Options web pages; conditional call forwarding features are accessible only from your User Options web pages. Your system administrator determines which call forwarding features are available to you.

If you want to...	Then...
Set up Call Forward All on your primary line	Press **CFwdALL** or **Forward All** and enter a target phone number.
Cancel Call Forward All on your primary line	Press **CFwdALL** or **Forward All**.
Verify that Call Forward All is enabled on your primary line	Look for: • The call forward icon above your primary phone number: • The call forward target number in the status line.
Set up or cancel call forwarding remotely, or for a non-primary line	**1.** Log in to your User Options web pages. (See Accessing Your User Options Web Pages, page 71.) **2.** Access your call forwarding settings. (See Controlling Line Settings on the Web, page 77.) **Note** When call forwarding is enabled for any line other than the primary line, your phone does not provide you with confirmation that calls are being forwarded. Instead, you must confirm your settings in the User Options web pages.

Tips

- Enter the call forward target number exactly as you would dial it from your phone. For example, enter an access code or the area code, if necessary.
- You can forward your calls to a traditional analog phone or to another IP phone, although your system administrator may restrict the call forwarding feature to numbers within your company.
- Call forwarding is phone line specific. If a call reaches you on a line where call forwarding is not enabled, the call will ring as usual.
- Your system administrator can enable a call forward override feature that allows the person receiving your forwarded calls to reach you. With override enabled, a call placed from the target phone to your phone is not forwarded, but rings through.
- Your phone may reject your attempt to set up Call Forward All directly on the phone if the target number that you enter would create a call forwarding loop or would exceed the maximum number of links permitted in a call forwarding chain.
- When you switch an in-progress call from your mobile phone to Cisco Unified devices that share the same line (Session Handoff), the Call Forward feature is disabled on the Cisco Unified devices. The Call Forward feature returns when the call ends.

Using Do Not Disturb

You can use the Do Not Disturb (DND) feature to turn off only the ringer on your phone or to turn off all audible and visual notifications of incoming calls. Your system administrator enables DND for your phone.

When DND and Call Forward are both enabled on your phone, calls are forwarded and the caller does not hear a busy tone.

DND interaction with other types of calls includes:

- DND does not affect intercom calls or non-intercom priority calls.
- If both DND and auto-answer are enabled, only intercom calls will be auto-answered.
- When you switch an in-progress call from your mobile phone to Cisco Unified devices that share the same line (Session Handoff), the DND feature is disabled on the Cisco Unified devices. The DND feature returns when the call ends.

If you want to...	Then...
Turn on DND	Press **DND** or **Do Not Disturb** . "Do Not Disturb" displays on the phone, the **DND** lights, and the ring tone is turned off.
Turn off DND	Press **DND or** Do Not Disturb **.**
Customize DND settings	If your system administrator configured DND settings to appear on the User Options page, follow these steps: **1.** Log in to your User Options web pages. See Accessing Your User Options Web Pages, page 71. **2.** From the drop-down menu, choose **User Options > Device.** **3.** Set these options: – Do Not Disturb—Set to enable/disable DND. – DND Option—Choose either Call Reject (to turn off all audible and visual notifications) or Ringer Off (to turn off only the ringer). – DND Incoming Call Alert (applies to either DND option set)—Set the alert to beep only, flash only, disable the alert, or choose "None" (to use the "Alert" setting configured by your system administrator).

Making Conference Calls

Your Cisco Unified IP Phone enables you to talk simultaneously with multiple parties in a conference call.

Using Conference Features

You can create a conference in various ways, depending on your needs and the features that are available on your phone.

- Conference—Enables you to create a standard (ad hoc) conference by calling each participant. Use the **Confrn** softkey or the **Conference** button. Conference is available on most phones.
- Join—Enables you to create a standard (ad hoc) conference by combining existing calls. Use the **Join** softkey or button.
- cBarge—Enables you to create a standard (ad hoc) conference by adding yourself to a call on a shared line. Press a line button or use the **cBarge** softkey or button. **cBarge** is available only on phones that use shared lines.
- Meet-Me—Enables you to create or join a conference by calling a conference number. Use the **MeetMe** softkey or button.

Using Conference

Conference enables you to call each participant. Conference is available on most phones.

If you want to...	Then...
Create a conference	**1.** From a connected call, press **Confrn** or **Conference**. (You may need to press the **more** softkey to see **Confrn**.) **2.** Enter the participant's phone number. **3.** Wait for the call to connect. **4.** Press **Confrn** or **Conference** again to add the participant to your call. **5.** Repeat to add additional participants.
Add new participants to an existing conference	Repeat the steps listed above. Your system administrator determines whether non-initiators of a conference can add or remove participants.
See a list of participants or remove participants	See Viewing or Removing Conference Participants, page 37.

Using Join

Join enables you to combine two or more existing calls to create a conference in which you are a participant.

If you want to...	Then...
Create a conference by joining together existing calls that are on a single phone line	**1.** From an active call, highlight another call that you want to include in the conference and press **Select**. Selected calls display this icon ☑. **2.** Repeat this step for each call that you want to add. **3.** Press **Join**. (You may need to press the **more** softkey to see **Join**.)
Create a conference by joining together existing calls that are on multiple phone lines	**1.** From an active call, press **Join**. (You may need to press the **more** softkey to see **Join**.) **2.** Press the green flashing line button for the call(s) that you want to include in the conference. You see one of these results: • The calls are joined. • A window opens on your phone screen and prompts you to select the call(s) that you want to join. Highlight the calls and press **Select**, then press **Join** to complete the action. **Note** If your phone does not support Join for calls on multiple lines, transfer the calls to a single line before using Join.
See a list of participants or remove participants	Press **ConfList** or **Conference List**. (You may need to press the **more** softkey first.) See Viewing or Removing Conference Participants, page 37.

Tips

- If you frequently join more than two parties into a single conference, you may find it useful to first select the calls that you want to join, then press **Join** to complete the action.
- When Join completes, caller ID changes to “Conference.”
- You may be able to combine multiple conference calls by using the **Join** or **DirTrfr** softkeys. Check with your system administrator to see if this feature is available to you.
- A Call Chaperone user can conference only the first caller. Subsequent callers can be conferenced by the other participants in the conference.

Using cBarge

You can create a conference by using cBarge to add yourself to a call on a shared line.

If you want to...	Then...
Create a conference by barging a call on a shared line	Press the line button for the shared line. In some cases, you must highlight the call and press **cBarge** to complete the action. See Using Barge to Add Yourself to a Shared-Line Call, page 43 for more information.
See a list of participants or remove participants	See Viewing or Removing Conference Participants, page 37.

Using Meet-Me

Meet-Me conferencing enables you to start or join a conference by calling the conference number.

If you want to...	Then...
Start a Meet-Me conference	**1.** Obtain a Meet-Me phone number from your system administrator. **2.** Distribute the number to participants. **3.** When you are ready to start the meeting, go off-hook to get a dial tone, then press **MeetMe.** **4.** Dial the Meet-Me conference number. Participants can now join the conference by dialing in. **Note** Participants hear a busy tone if they call the conference before the initiator has joined. In this case, participants must call back.
Join a Meet-Me conference	Dial the Meet-Me conference number (provided by the conference initiator). **Note** You will hear a busy tone if you call the conference before the initiator has joined. In this case, try your call again.
End a Meet-Me conference	All participants must hang up. The conference does not automatically end when the conference initiator disconnects.

Tip

If you call a secure Meet-Me conference number from a non-secure phone, your phone displays the message, “Device Not Authorized.” For more information, see Making and Receiving Secure Calls, page 47.

Viewing or Removing Conference Participants

During a standard (ad hoc) conference, you can view a list of participants and remove participants.

View a list of conference participants	Press **ConfList** or **Conference List**. Participants are listed in the order in which they join the conference with the most recent additions at the top. **Note** The conference participants list, ConfList, displays a maximum of 16 participants. Though users can add as many conference participants as the conference bridge supports, ConfList displays 16 participants only. As new participants join the conference, ConfList displays only the last 16 participants who have joined.
Get an updated list of conference participants	While viewing the conference list, press **Update**.
See who initiated the conference	While viewing the conference list, locate the participant listed at the bottom of the list with an asterisk (*) next to the name.
Remove any conference participant	While viewing the conference list, highlight the participant's name and press **Remove**.
Drop the last participant added to the conference	While viewing the conference list, press **RMLstC** or **Remove Last Participant**.
Verify that a conference call is secure	Look for the or icon after "Conference" on the phone screen.
Verify that a participant is calling from a secure phone	Look for the or icon beside the participant's name on the phone screen.
Add more participants	See Using Conference, page 34.

Placing or Receiving Intercom Calls

You can make an intercom call to a target phone that auto-answers the call in speakerphone mode with mute activated. The one-way intercom call enables you to deliver a short message to the recipient. If the recipient's handset or headset is in use, the audio is sent to the device that is use. Any current call activity that your recipient is engaged in continues simultaneously.

The target destination receives an intercom-alert tone and can then choose to:

- Listen to the caller with your microphone muted (you can hear the caller but the caller cannot hear you).
- End the intercom call by pressing the **EndCall** softkey with the intercom call in focus. Do this if you do not want to hear the message.
- Talk to the caller by pressing the active intercom button, and use either the handset, headset or speaker. The intercom call becomes a two-way connection so that you can converse with the caller.

When using the intercom feature, be aware of the following:

- From an intercom line, you can only dial other intercom lines.
- You can use only one intercom line at a time.
- When your active call is being monitored or recorded, you can receive or place intercom calls.
- You cannot place an intercom call on hold.

Note If you log into the same phone on a daily basis using your Cisco Extension Mobility profile, ensure that your system administrator assigns the phone button template that contains intercom information to this profile and assign the phone as the default intercom device for the intercom line.

If you want to...	Then...
Place an intercom call to a preconfigured intercom target	Press (intercom target line) and, after you hear the intercom-alert tone, begin speaking.
Place an intercom call to any intercom number	Press (an intercom line). Enter the intercom target number or press a speed-dial number for your target. After you hear the intercom-alert tone, begin speaking.
Receive an intercom call	When you hear the intercom-alert tone, handle the call in one of these ways: • Listen to the message in one-way audio. • Speak to the caller by pressing (the active intercom line). • Press **EndCall** with the intercom call in focus.

Advanced Call Handling

Advanced call-handling tasks involve special features that your system administrator might configure for your phone depending on your call-handling needs and work environment.

Speed Dialing

Speed dialing enables you to enter an index number, press a button, or select a phone screen item to place a call. Depending on configuration, your phone can support several speed-dial features:

- Speed-dial buttons
- Abbreviated Dialing
- Fast Dials

Note

- To set up speed-dial buttons and Abbreviated Dial, you must access your User Options web pages. See Accessing Your User Options Web Pages, page 71.
- To set up Fast Dials, you must access the Personal Directory feature. See Using Personal Directory on Your Phone, page 66.
- Alternately, your system administrator can configure speed-dial features for you.

If you want to...	Then...
Use speed-dial buttons	**1.** Set up speed-dial buttons. See Setting Up Speed Dials on the Web, page 74. **2.** To place a call, press (a speed-dial button). **Note** If your phone supports the Busy Lamp Field (BLF) speed-dial feature, you can see if the speed-dial number is busy before dialing. See Using BLF to Determine a Line State, page 46.
Use Abbreviated Dial	**1.** Set up Abbreviated Dialing codes. See Setting Up Speed Dials on the Web, page 74. **2.** To place a call, enter the Abbreviated Dialing code and press **AbbrDial**.

If you want to...	Then...
Use Fast Dial	**1.** Create a Personal Address Book entry and assign a Fast Dials code. See Using the Personal Directory on the Web, page 72. **2.** To place a call, access the Fast Dial service on your phone. See Using Personal Directory on Your Phone, page 66.

Picking Up a Redirected Call on Your Phone

Call PickUp enables you to answer a call that is ringing on a coworker's phone by redirecting the call to your phone. You might use Call PickUp if you share call-handling tasks with coworkers.

If you want to...	Then...
Answer a call that is ringing on another extension within your call pickup group	**1.** Press the **PickUp** softkey or button. (You might have to go off-hook to display the softkey.) If your phone supports auto-pickup, you are now connected to the call. **2.** If the call rings, press **Answer** to connect to the call.
Answer a call that is ringing on another extension outside of your call pickup group	**1.** Press the **GPickUp** softkey or the **Group PickUp** button. (You might have to go off-hook to display the softkey.) **2.** Enter the group pickup number. If your phone supports auto-pickup, you are now connected to the call. **3.** If the call rings, press **Answer** to connect to the call.
Answer a call that is ringing on another extension in your group or in an associated group	**1.** Press the **OPickUp** softkey or the **Other PickUp** button. (You might have to go off-hook to display the softkey.) If your phone supports auto-pickup, you are now connected to the call. **2.** If the call rings, press **Answer** to connect to the call.
Answer a call that is ringing on a particular extension (line number)	**1.** Press the **GPickUp** softkey or the **Group PickUp** button. (You might have to go off-hook to display the softkey.) **2.** Enter the line number with the call that you want to pick up. For example, if the call that you want to pick up is ringing on line 12345, enter 12345. **3.** If your phone supports auto-pickup, you are now connected to the call. **4.** If the call rings, press **Answer** to connect to the call.

Tips

- If multiple calls are available for pickup, your phone picks up the oldest call first (the call that has been ringing for the longest time).
- If you press **GPickUp** or **Group PickUp** and enter a line number, your phone picks up the ringing call on that particular line (if available).
- If you have multiple lines and want to pick up the call on a non-primary line, first press for the desired line, then press a **Call PickUp** softkey or button.
- Depending on how your phone is configured, you might receive an audio and/or visual alert about a call to your pickup group.
- If you use the BLF Pickup feature on your phone, see Using BLF to Determine a Line State, page 46.

Storing and Retrieving Parked Calls

You can park a call when you want to store the call so that you or someone else can retrieve it from another phone in the Cisco Unified Communications Manager (Unified CM) system (for example, a phone at a co-worker's desk or in a conference room).

You can park a call by using these methods:

- Call Park—Use the **Park** softkey to store the call. Your phone displays the call park number where the system stored your call. You must record this number and then use the same number to retrieve the call.
- Directed Call Park—Press the **Transfer** softkey during a call. To store the call, dial the Directed Call Park number and press **Transfer** again.
- Assisted Directed Call Park—Use the **Assisted Directed Call Park** button displaying an idle line status indicator. To retrieve the call from any other Cisco Unified IP Phone in your network, press the flashing Assisted Direct Call Park button.

If you want to...	Then...
Store an active call using Call Park	**1.** During a call, press **Park**. (You may need to press the **more** softkey to see **Park**.) **2.** Note the call park number displayed on your phone screen. **3.** Hang up.
Retrieve a parked call	Enter the call park number from any Cisco Unified IP Phone in your network to connect to the call.
Direct and store an active call at a directed call park number	**1.** During a call, press **Transfer**. **2.** Dial the directed call park number. **3.** Press **Transfer** again to finish storing the call.

If you want to...	Then...
Retrieve a parked call from a directed call park number	From any Cisco Unified IP Phone in your network, enter the park retrieval prefix and dial the directed call park number.
Direct and store an active call at an assisted directed call park number	During a call, press the Assisted Directed Call Park button displaying an idle Line Status indicator .
Retrieve a parked call from an assisted directed call park number	Press the flashing Assisted Direct Call Park button. **Note** If your administrator has not configured a reversion directory number, the parked call is reversed to the phone parking the call.

Tips

- You have a limited time to retrieve a parked call before it reverts to ringing at the original number. See your system administrator for details.
- Your system administrator can assign Directed Call Park buttons to available line buttons on your Cisco Unified IP Phone or on your Cisco Unified IP Phone Expansion Module, if available and supported by your phone.
- You can dial directed call park numbers if you do not have Directed Call Park buttons on your phone. However, you will not be able to see the status of the directed call park number.

Logging Out of Hunt Groups

If your organization receives a large number of incoming calls, you might be a member of a hunt group. A hunt group includes a series of directory numbers that share the incoming call load. When the first directory number in the hunt group is busy, the system hunts for the next available directory number in the group and directs the call to that phone.

When you are away from your phone, you can prevent hunt group calls from ringing your phone by logging out of hunt groups.

If you want to...	Then...
Log out of hunt groups to temporarily block hunt group calls	Press **HLog** or **Hunt Group**. Your phone screen displays, “Logged out of Hunt Group.”
Log in to receive hunt group calls	Press **HLog** or **Hunt Group**. When logged in, the Hunt Group button is lit.

Tip

Logging out of hunt groups does not prevent non-hunt group calls from ringing your phone.

Using a Shared Line

Your system administrator might ask you to use a shared line if you:

- Have multiple phones and want one phone number
- Share call-handling tasks with coworkers
- Handle calls on behalf of a manager

Understanding Shared Lines

Remote-in-Use Icon

The remote-in-use icon appears when another phone that shares your line has a connected call. You can place and receive calls as usual on the shared line, even when the remote-in-use icon appears.

Sharing Call Information and Barging

Phones that share a line each display information about calls that are placed and received on the shared line. This information might include caller ID and call duration. (See the Privacy section for exceptions.)

When call information is visible in this way, you and coworkers who share a line can add yourselves to calls using either **Barge** or **cBarge**. See Using Barge to Add Yourself to a Shared-Line Call, page 43.

Privacy

If you do not want coworkers who share your line to see information about your calls, enable the Privacy feature. Doing so also prevents coworkers from barging your calls. See Preventing Others from Viewing or Barging a Shared-Line Call, page 45.

Note The maximum number of calls that a shared line supports can vary by phone.

Using Barge to Add Yourself to a Shared-Line Call

You can use barge features (cBarge or Barge) to add yourself to calls on your shared line. (Calls must be non-private calls. See Using a Shared Line, page 43.)

Understanding Barge Features

cBarge and Barge

Depending on how your phone is configured, you can add yourself to a non-private call on a shared line using either cBarge or Barge:

- cBarge converts the call into a standard conference, allowing you to add new participants. (See Making Conference Calls, page 33 for information about standard conferences.)
- Barge enables you to add yourself to the call but does not convert the call into a conference or allow you to add new participants.

Single-button and Multi-touch Barge

Your system administrator determines whether the barge feature on your phone (cBarge or Barge) operates as a single-button or multi-touch feature.

- Single button barge enables you to press a line button to barge a call (if only one call is on the line).
- Multi-touch barge enables you to view call information before barging.

Using Barge Features

The table below describes how to use barge features (cBarge or Barge) to add yourself to a call on a shared line.

If you want to...	Then...
See if the shared line is in use	Look for the remote-in-use icon next to a red line button .
Add yourself to a call on a shared line	Press the red line button for the shared line. You see one of these results: • You are added to the call. • A window opens on your phone screen prompting you to select the call that you want to barge. Press **Barge** or **cBarge** to complete the action. (You may need to press the **more** softkey to display **Barge** or **cBarge**.)
View conference participants (if you used cBarge)	See Viewing or Removing Conference Participants, page 37.

Tips

- When you barge a call, other parties may hear a beep tone announcing your presence. With cBarge, other parties hear a brief audio interruption and the phone screen changes to display conference details.
- If a phone that is using the shared line has Privacy enabled, call information and barge softkeys will not appear on the other phones that share the line.

- If a phone that is using the shared line has Privacy disabled and is configured with Private Line Automated Ringdown (PLAR), the barge and cBarge features will still be available.
- You will be disconnected from a call that you have joined using Barge if the call is put on hold, transferred, or turned into a conference call.

Preventing Others from Viewing or Barging a Shared-Line Call

If you share a phone line, you can use the Privacy feature to prevent others who share the line from viewing or barging (adding themselves to) your calls.

If you want to...	Then...
Prevent others from viewing or barging calls on a shared line	**1.** Press **Private** . **2.** To verify that Privacy is on, look for the feature-enabled icon next to an amber line button .
Allow others to view or barge calls on a shared line	**1.** Press **Private** . **2.** To verify that Privacy is off, look for the feature-disabled icon next to an unlit line button .

Tips

- If the phone that shares your line has Privacy enabled, you can make and receive calls using the shared line as usual.
- The Privacy feature applies to all shared lines on your phone. Consequently, if you have multiple shared lines and Privacy is enabled, coworkers cannot view or barge calls on any of your shared lines.

Using BLF to Determine a Line State

Busy Lamp Field (BLF) features allow you to view the state of a phone line that is associated with a speed-dial button, call log, or directory listing on your phone. If you use BLF Pickup, you can answer a ringing call for the line that you are monitoring. Your system administrator determines which BLF features are configured for your phone.

If you want to...	Then...
See the state of a line listed in a call log or directory	Look for one of these BLF indicators next to the line number: Line is in-use. Line is idle. Line is in Do Not Disturb state. BLF indicator unavailable for this line.
See the state of a speed-dial line	Look for one of these BLF indicators next to the line number: + Line is in-use. + Line is idle. + Line is in Do Not Disturb state. + (flashing)—Line is ringing (BLF Pickup only). BLF indicator unavailable for this line.
Use BLF Pickup to answer a call ringing on a coworker's phone	Press the BLF Pickup button while the line is ringing. The call is redirected to the next available line on your phone. (If you want to specify a line, first press a line button and then press the BLF button.) If your phone supports auto-pickup, the call connects automatically. Otherwise, the call rings on your phone for you to answer. **Note** If you press the BLF Pickup button when the monitored line is *not* ringing, your phone will speed dial the line number.

Tips

- Your phone may play an audible indicator to alert you when a call is ringing on the monitored line (BLF Pickup only).
- BLF Pickup answers the oldest ringing call first (if the line that you are monitoring has more than one ringing call).

Making and Receiving Secure Calls

Depending on how your system administrator configured your phone system, your phone may support making and receiving secure calls.

Your phone can support these types of calls:

- *Authenticated* call—The identities of the phones participating in the call have been verified.
- *Encrypted* call—The phone is receiving and transmitting encrypted audio (your conversation) within the Unified CM network. Encrypted calls are authenticated.
- *Protected* call—The phone is a secure (encrypted and trusted) device on the Unified CM server and is configured as a "Protected Device" in Unified CM Administration.

  If "Play Secure Indication Tone" is enabled (True) in Unified CM Administration, the protected phone plays a secure or nonsecure indication tone at the beginning of the call:

  - When end-to-end secure media is established through the Secure Real-Time Transfer Protocol (SRTP) and the call status is secure, the phone plays the secure indication tone (three long beeps with brief pauses).
  - When end-to-end nonsecure media is established through the Real-Time Protocol (RTP) and the call status is nonsecure, the phone plays the nonsecure indication tone (six short beeps with brief pauses). (This capability is a change with this release.)

  If the Play Secure Indication Tone option is disabled (False), no tone is played.
- *Nonprotected* call—The phone does not have a "Protected Device" status in Unified CM. No secure or nonsecure indication tone is played.
- *Nonsecure* call—The phone is not protected on the Unified CM server and the call status is nonsecure.

  For more information, see your system administrator.

Your system administrator also configures the VPN Client feature as needed. If it is enabled and the VPN Client mode is enabled on the phone, you are prompted for your credentials as follows:

- If your phone is located outside the corporate network—You are prompted at login to enter your credentials based on the authentication method that your system administrator configured on your phone.
- If your phone is located inside the corporate network—
  - If Auto Network Detection is disabled, you are prompted for credentials, and a VPN connection is possible.
  - If Auto Network Detection is enabled, you cannot connect through VPN so you are not prompted.

To access the VPN Configuration settings, press the **Settings** button and choose **Security Configuration > VPN Configuration**.

After the phone starts up and the VPN Login screen appears, enter your credentials based on the configured authentication method:

- Username and password—Enter your username and the password that your system administrator gave you.
- Password and certificate—Enter the password that your system administrator gave you. Your username is derived from the certificate.
- Certificate—If the phone uses only a certificate for authentication, you do not need enter authentication data. The VPN Login screen displays the status of the phone attempting the VPN connection.

With the authentication methods that require a password, use the << softkey to backspace and correct the password.

(When the power is lost or reset under some circumstances, the stored credentials are cleared.)

To establish the VPN connection, press the **Submit** softkey.

To disable the VPN login process, press the **Cancel** softkey.

If you want to...	Then...
Check the security level of a call or conference	Look for a security icon in the top right corner of the call activity area, next to the call duration timer: Authenticated call or conference Encrypted call or conference Non-secure call or conference
Verify that the phone connection (call status) is secure.	Listen for a secure indication tone at the beginning of the call: • Secure call status—If the phone is protected, the "Play Secure Indication Tone" is enabled, and the call status is secure, a secure indication tone plays on the protected phone at the beginning of a call (three long beeps with pauses). The lock icon is also present to indicate that the call is secure. • Nonsecure call status—If the phone is protected, the "Play Secure Indication Tone" is enabled, and the call status is nonsecure, a nonsecure indication tone plays on the protected phone at the beginning of a call (six short beeps with brief pauses). The play arrow icon is also present to indicate that the call is not secure. For more information, see your system administrator.

If you want to...	Then...
Determine if secure calls can be made in your company	Contact your system administrator.

Note There are interactions, restrictions, and limitations that affect how security features work on your phone. For more information, ask your system administrator.

Note A device engaged in a call is either trusted or untrusted as determined by Cisco. Lock or shield icons are not displayed on a Cisco Unified IP Phone screen when a call is to or from an untrusted device, even though the call might be secure.

Tracing Suspicious Calls

If you are receiving suspicious or malicious calls, your system administrator can add the Malicious Call Identification (MCID) feature to your phone. This feature enables you to identify an active call as suspicious, which initiates a series of automated tracking and notification messages.

If you want to...	Then...
Notify your system administrator about a suspicious or harassing call	Press **MCID** or **Malicious Call ID**. Your phone plays a tone and displays the message, "MCID successful."

Prioritizing Critical Calls

(SCCP phones only)

In some specialized environments, such as military or government offices, you might need to make and receive urgent or critical calls. If you have the need for this specialized call handling, your system administrator can add Multilevel Precedence and Preemption (MLPP) to your phone.

Keep these terms in mind:

- *Precedence* indicates the priority associated with a call.
- *Preemption* is the process of ending an existing, lower priority call while accepting a higher priority call that is sent to your phone.

If you...	Then...
Want to choose a priority (precedence) level for an outgoing call	Contact your system administrator for a list of corresponding precedence numbers for calls.

Want to make a priority (precedence) call	Enter the MLPP access number (provided by your system administrator) followed by the phone number.
Hear a special ring (faster than usual) or special call waiting tone	You are receiving a priority (precedence) call. An MLPP icon on your phone screen indicates the priority level of the call.
Want to view priority level of a call	Look for an MLPP icon on your phone screen: Priority call Medium priority (immediate) call High priority (flash) call Highest priority (flash override) or Executive Override call Higher priority calls are displayed at the top of your call list. If you do not see an MLPP icon, the priority level of the call is normal (routine).
Want to accept a higher-priority call	Answer the call as usual. If necessary, end an active call first.
Hear a continuous tone interrupting your call	You or the other party are receiving a call that must preempt the current call. Hang up immediately to allow the higher priority call to ring through.

Tips

- When you make or receive an MLPP-enabled call, you will hear special ring tones and call waiting tones that differ from the standard tones.
- If you enter an invalid MLPP access number, a verbal announcement will alert you of the error.
- An MLPP-enabled call retains its priority and preemptive status when you:
  - Put the call on hold
  - Transfer the call
  - Add the call to a three-way conference
  - Answer the call using PickUp
- MLPP overrides the Do Not Disturb (DND) feature.

Using Cisco Extension Mobility

Cisco Extension Mobility (EM) enables you to temporarily configure a Cisco Unified IP Phone as your own. Once you log in to EM, the phone adopts your user profile, including your phone lines, features, established services, and web-based settings. Your system administrator must configure EM for you.

The Cisco Extension Mobility ChangePIN feature allows you to change your PIN from your Cisco Unified IP Phone.

If you want to...	Then...
Log in to EM	**1.** Choose > **EM Service** (name can vary). **2.** Enter your user ID and PIN (provided by your system administrator). **3.** If prompted, select a device profile.
Log out of EM	**1.** Choose > **EM Service** (name can vary). **2.** When prompted to log out, press **Yes**.
Change your PIN using the Change Credentials service	**1.** Choose > **Change Credentials.** **2.** Enter your User ID in the **User ID** field. **3.** Enter your PIN in the **Current PIN** field. **4.** Enter your new PIN in the **New PIN** field. **5.** Enter your new PIN again in the **Confirm PIN** field. **6.** Press **Change.** You will see a PIN Change Successful message. **7.** Press **Exit.**
Change your PIN using the ChangePIN softkey	**1.** Choose > **EM Service** (name can vary). **2.** Press **ChangePIN.** **3.** Enter your PIN in the **Current PIN** field. **4.** Enter your new PIN in the **New PIN** field. **5.** Enter your new PIN again in the **Confirm PIN** field. **6.** Press **Change.** You will see a PIN Change Successful message. **7.** Press **Exit.**

Tips

- EM automatically logs you out after a certain amount of time. Your system administrator establishes this time limit.
- Changes that you make to your EM profile from your Cisco Unified CM User Options web pages take effect immediately if you are logged in to EM on the phone; otherwise, changes take effect the next time you log in.
- Changes that you make to the phone from your User Options web pages take effect immediately if you are logged out of EM; otherwise, changes take effect after you log out.
- Local settings controlled by the phone are not maintained in your EM profile.

Managing Business Calls Using a Single Phone Number

Intelligent Session Control associates your mobile phone number with your business IP phone number. When you receive a call to your remote destination (mobile phone), your desk phone does not ring; only your remote destination rings. When an incoming call is answered on the mobile phone, the desk phone displays a Remote in Use message.

During a call you can also use any of your mobile phone features. For example, if you receive a call on your mobile number, you can answer the call from either your desk phone or you can handoff the call from your mobile phone to your desk phone.

If you want to...	Then...
Transfer your incoming mobile active call to desk phone	Use the various features of your mobile phone (for example, *74). Contact your system administrator for a list of access codes.

With Mobile Connect and Mobile Voice Access installed, you can use your mobile phone to handle calls associated with your desktop phone number.

Your desktop and remote destinations receive calls simultaneously.

When you answer the call on your desktop phone, the remote destinations stop ringing, are disconnected, and display a missed call message.

When you answer the call on one remote destination, the other remote destinations stop ringing, are disconnected, and a missed call message is shown on the other remote destinations.

If you want to...	Then...
Configure Mobile Connect	Use the User Options web pages to set up remote destinations and create access lists to allow or block calls from specific phone numbers from being passed to the remote destinations. See Setting Up Phones and Access Lists for Mobile Connect, page 79.
Answer a call using your mobile phone	See Answering a Call, page 24.
Switch an in-progress call between your desk phone and mobile phone	See Switching an In-Progress Call to Another Phone, page 28.
Put a call that has been picked up on your mobile phone on hold	**1.** Press the *Enterprise Hold* (name may vary) softkey. The other party is placed on hold. **2.** On your mobile phone, press the *Resume* (name may vary) softkey on the mobile phone. See Switching an In-Progress Call to Another Phone, page 28.

If you want to...	Then...
Connect to Mobile Voice Access	**1.** From any phone, dial your assigned Mobile Voice Access number. **2.** Enter the number you are calling from, if prompted, and your PIN.
Turn on Mobile Connect from your mobile phone	**1.** Dial your assigned Mobile Voice access number. **2.** Enter your mobile phone number (if requested) and PIN. **3.** Press **2** to enable Mobile Connect. **4.** Choose whether to turn Mobile Connect on for all configured phones or just one: – All phones—Enter **2**. – One phone—Enter **1**, then the remote destination you want to add, followed by **#**.
Make a call from your mobile phone	See Placing a Call—Additional Options, page 22.
Turn off Mobile Connect from your mobile phone	**1.** Dial your assigned Mobile Voice Access number. **2.** Enter your mobile phone number (if requested) and PIN. **3.** Press **3** to disable Mobile Connect. **4.** Choose whether to turn off Mobile Connect for all configured phones or just one: – All phones—Enter **2**. – One phone—Enter **1**, then the remote destination you want to add, followed by **#**.
Turn on or off Mobile Connect access to all your remote destinations from your desk phone	**1.** Press **Mobility** to display the current remote destination status (Enabled or Disabled). **2.** Press **Select** to change the status. **3.** Press **Exit**.

Tips

- When calling Mobile Voice Access, you must enter the number you are calling and your PIN if any of the following are true:
  - The number you are calling from is not one of your remote destinations.
  - The number is blocked by you or your carrier (shown as “Unknown Number”).
  - The number is not accurately matched in the Unified CM database; for example, if your number is 510-666-9999, but it is listed as 666-9999 in the database, or your number is 408-999-6666, but it is entered as 1-408-999-6666 in the database.

- If you incorrectly enter any requested information (such as mobile phone number or PIN) three times in a row, the Mobile Voice Access call disconnects, and you are locked out for a period of time. Contact your system administrator if you need assistance.

Using a Handset, Headset, and Speakerphone

You can use your phone with these audio devices: a handset, headset, or speakerphone.

The phone is *off-hook* when the handset is lifted or another audio device is in use.

The phone is *on-hook* when the handset is in its cradle and other audio devices are not in use.

Using a Handset

If you want to...	Then...
Use the handset	Lift it to go off-hook; replace it in the cradle to go on-hook. The ringing line is selected automatically. Contact your system administrator for the options to select the primary line each time.
Switch to the speakerphone or headset during a call	Press or , then hang up the handset.
Adjust the volume level for a call	Press during a call or after invoking a dial tone. Press **Save** to preserve the volume level for future calls.

Using a Headset

Your phone supports four- or six-wire headset jacks for wired headsets. Cisco Unified IP Phone 7975G, 7965G, and 7945G also support wireless headsets. For information about purchasing headsets, see Headset Support, page 7.

You can use a headset with all of the controls on your phone, including and .

However, if you use a wireless headset, refer to the wireless headset documentation for instructions.

If you want to...	Then...
Toggle headset mode on and off	Press .
Switch to a handset	Lift the handset.
Adjust the volume level for a call	Press during a call or after invoking a dial tone. Press **Save** to preserve the volume level for future calls.

If you use AutoAnswer, see Using AutoAnswer with a Headset or Speakerphone, page 57.

Using a Wireless Headset

Cisco Unified IP Phone 7975G, 7965G, and 7945G support wireless headsets. Refer to the wireless headset documentation for information about using the wireless headset's remote features. Also, check with your system administrator to be sure your phone is enabled to use a wireless headset with the wireless headset remote hookswitch control feature.

Using Wideband with your Headset

If you use a headset that supports wideband, you may experience improved audio sensitivity if you enable the wideband setting on your phone (this setting is disabled by default). To access the setting, choose > **User Preferences > Audio Preferences > Wideband Headset**.

If the Wideband Headset setting shows as dimmed, then this setting is not user controllable.

Check with your system administrator to be sure your phone system is configured to use wideband. If the system is not configured for wideband, you may not detect any additional audio sensitivity even when using a wideband headset. To learn more about your headset, refer to the headset documentation or ask your system administrator for assistance.

Using a Speakerphone

Many of the actions you can take to dial a number or answer a call will automatically trigger speakerphone mode, assuming that the handset is in its cradle and is not lit.

If you want to...	Then...
Toggle speakerphone mode on or off	Press .
Switch to a handset	Lift the handset.
Adjust the volume level for a call	Press during a call or after invoking a dial tone. Press **Save** to preserve the volume level for future calls.

Using AutoAnswer with a Headset or Speakerphone

When AutoAnswer is enabled, your phone answers incoming calls automatically after a few rings. Your system administrator configures AutoAnswer to use either the speakerphone or a headset. You may use AutoAnswer if you receive a high volume of incoming calls.

If you...	Then...
Use AutoAnswer with a headset	Keep headset mode active (in other words, keep illuminated), even when you are not on a call. To keep headset mode active, do the following: • Press **EndCall** to hang up. • Press **New Call** or **Dial** to place new calls. If your phone is set up to use AutoAnswer in headset mode, calls are automatically answered only if is illuminated. Otherwise, calls ring normally and you must manually answer them.
Use AutoAnswer with the speakerphone	Keep the handset in the cradle and headset mode inactive (unlit). Otherwise, calls ring normally and you must manually answer them.

Tip

AutoAnswer is disabled when the Do Not Disturb feature is active.

Changing Phone Settings

You can personalize your Cisco Unified IP Phone by adjusting the ring tone, background image, and other settings.

Customizing Rings and Message Indicators

You can customize how your phone indicates an incoming call and a new voice mail message. You can also adjust the ringer volume for your phone.

If you want to...	Then...
Change the ring tone per line	**1.** Choose > **User Preferences** > **Rings**. **2.** Choose a phone line or the default ring setting. **3.** Choose a ring tone to play a sample of it. **4.** Press **Select** and **Save** to set the ring tone, or press **Cancel**.
Adjust the volume level for the phone ringer	Press while the handset is in the cradle and the headset and speakerphone buttons are off. The new ringer volume is saved automatically. **Note** Check with your system administrator to see if a minimum ringer-volume setting was configured.
Change the ring pattern per line (flash-only, ring once, beep-only, etc.)	**1.** Log in to your Cisco Unified CM User Options web pages. (See Accessing Your User Options Web Pages, page 71.) **2.** Access your call ring pattern settings. (See Controlling Line Settings on the Web, page 77.) **Note** Before you can access this setting, your system administrator may need to enable it for you.

If you want to...	Then...
Change the way the audible voice message indicator sounds on your phone	**1.** Log in to your User Options web pages. (See Accessing Your User Options Web Pages, page 71.) **2.** Access your message indicator settings. (See Controlling Line Settings on the Web, page 77.)
Change the way that the voice message light on your handset works	**1.** Log in to your User Options web pages. (See Accessing Your User Options Web Pages, page 71.) **2.** Access your message indicator settings. (See Controlling Line Settings on the Web, page 77.) **Note** Typically, the default system policy is to indicate a new voice message by displaying a steady light on the handset light strip.

Tip

You can customize your phone to have up to six distinctive ring tones. In addition, you can have a default ring tone.

Customizing the Phone Screen

You can adjust the characteristics of the phone screen.

If you want to...	Then...
Change the phone screen brightness	**1.** Choose > **User Preferences** > **Brightness**. **2.** To make adjustments, press **Up**, **Down** or . **3.** Press **Save**, or press **Cancel**. **Note** If you change the brightness setting on your phone, do not unplug the phone from its power source for at least one minute, or the brightness setting will not get saved.
Adjust the phone screen to accommodate your viewing angle	For Cisco Unified IP Phone 7971G-GE and 7970G only: **1.** Choose > **User Preferences** > **Viewing Angle**. **2.** To make adjustments, press **Up**, **Down** or . **3.** Press **Save**, or press **Cancel**.

If you want to...	Then...
Change the background image	**1.** Choose > **User Preferences > Background Images**. **2.** Scroll through available images and press **Select** to choose an image. **3.** Press **Preview** to see a larger view of the background image. **4.** Press **Exit** to return to the selection menu. **5.** Press **Save** to accept the new image, or press **Cancel**. **Note** If you do not see a selection of images, then this option has not been enabled on your system.
Enable or disable the touchscreen	For Cisco Unified IP Phone 7975G, 7971G-GE, and 7970G only. See Cleaning and Maintaining the Phone Screen, page 17.
Change the language on your phone screen	**1.** Log in to your User Options web pages. (See Accessing Your User Options Web Pages, page 71.) **2.** Access your user settings. (See Controlling User Settings on the Web, page 77.)
Change the line text label	**1.** Log in to your User Options web pages. (See Accessing Your User Options Web Pages, page 71.) **2.** Access your line label settings. (See Controlling Line Settings on the Web, page 77.)
Turn off illumination of the phone screen	Contact your system administrator to see if this optional feature is available to you. This feature enables you to turn off phone screen illumination for a pre-determined time (as set by your system administrator).

Using Call Logs and Directories

This section describes how you can use call logs and directories. To access both features, use the Directories button .

Using Call Logs

Your phone maintains call logs that contain records of your missed, placed, and received calls.

Your system administrator determines if missed calls are logged on your phone in the missed calls directory for a given line appearance on your phone.

If you want to...	Then...
View your call logs	Choose > **Missed Calls**, **Placed Calls**, or **Received Calls**. Each stores up to 100 records.
Display details for a single call record	**1.** Choose > **Missed Calls**, **Placed Calls**, or **Received Calls**. **2.** Highlight a call record. **3.** Press **Details**. Doing so displays information such as called number, calling number, time of day, and call duration (for placed and received calls only).
Erase all call records in all logs	Press , then press **Clear**.
Erase all call records in a single log	**1.** Choose > **Missed Calls**, **Placed Calls**, or **Received Calls**. **2.** Highlight a call record. **3.** **Press Clear**. (You may need to press the **more** softkey to display **Clear**.)
Erase a single call record	**1.** Choose > **Missed Calls**, **Placed Calls**, or **Received Calls**. **2.** Highlight a call record. **3.** **Press Delete**.

If you want to...	Then...
Dial from a call log (while not on another call)	**1.** Choose > **Missed Calls**, **Placed Calls**, or **Received Calls**. **2.** Highlight a call record. **Note** If the Details softkey appears, the call is the primary entry of a multiparty call. See the Tips section below. **3.** If you need to edit the displayed number, press **EditDial** followed by **<<** or **>>**. To delete the number, press **EditDial** followed by **Delete**. (You may need to press the **more** softkey to display **Delete**.) **4.** Go off-hook to place the call.
Dial from a call log (while connected to another call)	**1.** Choose > **Missed Calls**, **Placed Calls**, or **Received Calls**. **2.** Highlight a call record. **Note** If the Details softkey appears, the call is the primary entry of a multiparty call. See the Tips section below. **3.** If you need to edit the displayed number, press **EditDial** followed by **<<** or **>>**. To delete the number, press **EditDial** followed by **Delete**. (You may need to press the **more** softkey to display **Delete**.) **4.** Press **Dial**. **5.** Choose a menu item to handle the original call: – **Hold**—Puts the first call on hold and dials the second. – **Transfer**—Transfers the first party to the second and drops you from the call. (Press **Transfer** again after dialing to complete the action.) – **Conference**—Creates a conference call with all parties, including you. (Press **Confrn** or **Conference** again after dialing to complete the action.) – **EndCall**—Disconnects the first call and dials the second.
See if the line in the call log is busy before placing a call to that line	Look for Busy Lamp Field indicators. See Using BLF to Determine a Line State, page 46.
Place a call from a URL entry in a call log (SIP phones only)	**1.** Choose > **Missed Calls**, **Placed Calls**, or **Received Calls**. **2.** Highlight the URL entry that you want to dial. **3.** If you need to edit the entry, press **EditDial**. **4.** The @ icon appears to indicate that you can begin editing characters in the URL entry. **5.** Press **Dial**.

If you want to...	Then...
Redial an international call from missed and received call logs	**1.** Choose > **Missed Calls** or **Received Calls**. **2.** Highlight the call record that you want to dial. **3.** Press **EditDial**. **4.** Press and hold the "*" key for at least 1 second to add a "+" sign as the first digit in the phone number. (You can add the + sign only for the first digit of the number.) **5.** Press **Dial**.

Tips

- (SCCP and SIP phones) Your phone may be set up for international call logging, which is indicated by a "+" symbol on the call logs, redial, or call directory entries. See your system administrator for more information.
- (SCCP phones only) To view the complete call record of a multiparty call, such as a call that has been forwarded or transferred to you, highlight the call record and press **Details**. The Details record shows two entries with the name and number for each missed or received multiparty call:
  - First entry—Last completed multiparty call
  - Second entry—First completed multiparty call

Directory Dialing

Depending on configuration, your phone can provide corporate and personal directory features:

- Corporate Directory—Corporate contacts that you can access on your phone. Your system administrator sets up and maintains your Corporate Directory.
- Personal Directory—If available, personal contacts and associated speed-dial codes that you can configure and access from your phone and Cisco Unified CM User Options web pages. The Personal Directory comprises the Personal Address Book (PAB) and Fast Dials:
  - PAB is a directory of your personal contacts.
  - Fast Dials enables you to assign codes to PAB entries for quick dialing.

Using Corporate Directory on Your Phone

You can use a corporate directory to place calls to coworkers.

If you want to...	Then...
Dial from a corporate directory (while not on another call)	**1.** Choose > **Corporate Directory** (exact name can vary). **2.** User your keypad to enter a full or partial name and press **Search**. **3.** To dial, press the listing, or scroll to the listing and go off-hook.
Dial from a corporate directory (while on another call)	**1.** Choose > **Corporate Directory** (exact name can vary). **2.** User your keypad to enter a full or partial name and press **Search**. **3.** Scroll to a listing and press **Dial**. **4.** Choose a menu item to handle the original call: – **Hold**—Puts the first call on hold and dials the second. – **Transfer**—Transfers the first party to the second and drops you from the call. (Press **Transfer** again after dialing to complete the action.) – **Conference**—Creates a conference call with all parties, including you. (Press **Confrn** or **Conference** again after dialing to complete the action.) – **EndCall**—Disconnects the first call and dials the second.
See if the phone line in the directory is busy	Look for Busy Lamp Field (BLF) indicators. See Using BLF to Determine a Line State, page 46.

Tip

Use the numbers on your keypad to enter characters on your phone screen. Use the Navigation button on your phone to move between input fields.

Using Personal Directory on Your Phone

The Personal Directory feature set contains your Personal Address Book (PAB) and Fast Dials. This section describes how to set up and use Personal Directory on your phone. Alternately, see Using the Personal Directory on the Web, page 72.

If you want to...	Then...
Access Personal Directory (for PAB and Fast Dial codes)	**1.** Choose > **Personal Directory** (exact name can vary). **2.** Enter your Unified CM user ID and PIN, then press **Submit**.

If you want to...	Then...
Search for a PAB entry	**1.** Access Personal Directory, then choose **Personal Address Book**. **2.** Enter search criteria and press **Submit**. **3.** You can choose **Previous** or **Next** to move through listings. **4.** Highlight the PAB listing that you want and press **Select**.
Dial from PAB entry	**1.** Search for a listing. **2.** Highlight the listing and press **Select**. **3.** Press **Dial**. (You may need to press the **more** softkey to see **Dial**.) **4.** Enter the participant's phone number. **5.** Highlight the number that you want to dial and press **OK**. **6.** Press **OK** again to dial the number.
Delete a PAB entry	**1.** Search for a listing. **2.** Highlight the listing and press **Select**. **3.** Press **Delete**. **4.** Choose **OK** to confirm the deletion.
Edit a PAB entry	**1.** Search for a listing. **2.** Highlight the listing and press **Edit** to modify a name or email address. **3.** If necessary, choose **Phones** to modify a phone number. **4.** Press **Update**.
Add a new PAB entry	**1.** Access Personal Directory, then choose **Personal Address Book**. **2.** Access the Search page by choosing **Submit**. (You do not need to input search information first.) **3.** Press **New**. **4.** Use your phone keypad to enter a name and email information. **5.** Choose **Phones** and use the keypad to enter phone numbers. Be sure to include any necessary access codes such as a 9 or 1. **6.** Choose **Submit** to add the entry to the database.
Assign a Fast Dial code to a PAB entry	**1.** Search for a PAB entry. **2.** Highlight the listing and press **Select**. **3.** Press **Fast Dial**. **4.** Highlight the number that you want to dial and press **Select**. **5.** Highlight the Fast Dial code that you want to assign to the number and press **Select**.

If you want to...	Then...
Add a new Fast Dial code (not using a PAB entry)	**1.** Choose > **Personal Directory** > **Personal Fast Dials**. **2.** Press **Fast Dial**. **3.** Highlight a Fast Dial code that is unassigned and press **Select**. **4.** Press **Assign**. **5.** Enter a phone number. **6.** Press **Update**.
Search for Fast Dial codes	**1.** Choose > **Personal Directory** > **Personal Fast Dials**. **2.** You can choose **Previous** or **Next** to move through listings. **3.** Highlight the listing that you want and press **Select**.
Place a call using a Fast Dial code	**1.** Search for a Fast Dial code. **2.** Highlight the listing you want and press **Select**. **3.** Press **Dial**. **4.** Choose **OK** to complete the action.
Delete a Fast Dial code	**1.** Search for a Fast Dial code. **2.** Highlight the listing you want and press **Select**. **3.** Press **Remove**.
Log out of Personal Directory	**1.** Choose > **Personal Directory** (exact name can vary). **2.** Choose **Logout**.

Tips

- Your system administrator can provide you the user ID and PIN that you need to log in to Personal Directory.
- Personal Directory automatically logs you out after a certain amount of time. This time limit can vary. Ask your system administrator for more information.
- Use the numbers on your keypad to enter characters on your phone screen. Use the Navigation button on your phone to move between input fields.
- Your phone may be set up for international call logging, which is indicated by a “+” symbol on the call logs, redial, or call directory entries. See your system administrator for more information.

Accessing Voice Messages

To access voice messages, press the Messages button .

Note Your company determines the voice-message service that your phone system uses. For the most accurate and detailed information about your service, refer to the documentation that came with it.

If you want to...	Then...
Set up and personalize your voice message service	Press and follow the voice instructions. If a menu appears on your phone screen, choose an appropriate menu item.
Check for your new voice messages	Look for: • A steady red light on your handset. (This indicator can vary. See Customizing Rings and Message Indicators, page 59.) • A flashing message waiting icon and text message on your phone screen. **Note** The red light and message waiting icon display only when you have a voice message on your primary line, even if you receive voice messages on other lines. Listen for: • A stutter tone from your handset, headset, or speakerphone when you place a call. **Note** The stutter tone is line-specific. You hear it only when using the line with the waiting messages.

If you want to...	Then...
Listen to your voice messages or access the voice-messages menu	Press . Depending on your voice-message service, doing so auto-dials the message service or provides a menu on your phone screen. If you are connecting to a voice-message service, the line that has a voice message is selected by default. If more than one line has a voice message, the first available line is selected. To connect each time to the voice-message service on the primary line, contact your system administrator for the options.
Send a call to a voice message system	Press **iDivert**. For more information, see the Sending a Call to a Voice Message System, page 31.

Using the User Options Web Pages

Your Cisco Unified IP Phone is a network device that can share information with other network devices in your company, including your personal computer. You can use your computer to log in to your Cisco Unified CM User Options web pages, where you can control features, settings, and services for your Cisco Unified IP Phone. For example, you can set up speed-dial buttons from your User Options web pages.

Accessing Your User Options Web Pages

This section describes how to log in and select a phone device.

If you want to...	Then do this...
Log in to your User Options web pages	**1.** Obtain a User Options URL, user ID, and default password from your system administrator. **2.** Open a web browser on your computer, enter the URL, and log on. **3.** If prompted to accept security settings, click **Yes** or **Install Certificate**. The Cisco Unified CM User Options main web page displays. From this page you can choose **User Options** to access User Settings, Directory features, a Personal Address Book, and Fast Dials. Or, to access phone-specific options, select a device (see below).
Select a device after logging in	**1.** After you have logged in to your User Options web pages, choose **User Options > Device**. The Device Configuration page displays. **2.** If you have multiple devices assigned to you, choose the appropriate device (phone model, Extension Mobility profile, or Remote Destination profile) from the Name drop-down menu. **Note** Toolbar buttons located at the top of the Device Configuration page are specific to the selected device type.
Select a configuration option after logging in	**1.** After you have logged in to your User Options web pages, choose **User Options** to access User Settings, Directory, Personal Address Book, Fast Dials, and Mobility Settings. **2.** To return to the Device Configuration page from another page, choose **User Options > Device**.

Configuring Features and Services on the Web

The topics in this section describe how to configure features and services from your User Options web pages after logging in. See Accessing Your User Options Web Pages, page 71.

Using the Personal Directory on the Web

The Personal Directory feature set that you can access on your computer consists of:

- A Personal Address Book (PAB)
- Fast Dials
- Cisco Unified CM Address Book Synchronizer

Note You can also access PAB and Fast Dials from your phone. See Using Personal Directory on Your Phone, page 66.

Using Your Personal Address Book on the Web

This section describes how to use your PAB from your User Options web pages.

If you want to...	Then do this after you log in...
Add a new PAB entry	**1.** Choose **User Options > Personal Address Book**. **2.** Click Add **New**. **3.** Enter information for the entry and click **Save**.
Assign a line button for your PAB	**Note** Before you can assign a line button for your PAB, your system administrator must configure the phone to display services. Contact your system administrator for more information. **1.** Choose **User Options > Device**. **2.** Click **Service URL.** **3.** From the Button drop-down list box, choose the **Personal Address Book** service. **4.** Enter a phone label for the button and then click **Save**. **5.** To refresh the phone configuration, click **Reset** and then **Restart**. You can now press the line button to access the PAB codes.
Search for a PAB entry	**1.** Choose **User Options > Personal Address Book**. **2.** Specify search information and click **Find**.

If you want to...	Then do this after you log in...
Edit a PAB entry	**1.** Search for a PAB entry. **2.** Click a name or nickname. **3.** Edit the entry as needed and click **Save**.
Delete a PAB entry	**1.** Search for a PAB entry. **2.** Select one or more entries and click **Delete Selected**.

Configuring Fast Dials on the Web

This section describes how to assign Fast Dials from your User Options web pages.

If you want to...	Then do this after you log in...
Assign a Fast Dial code to a PAB entry	**1.** Create a PAB entry. See Using Your Personal Address Book on the Web, page 72. **2.** Choose **User Options > Fast Dials**. **3.** Click **Add New.** **4.** To find the appropriate PAB entry, use the Search Options area. **5.** In the Search Results area, click a phone number. **6.** Change the Fast Dial code, if desired, and click **Save**.
Assign a Fast Dial code to a phone number (without using a PAB entry)	**1.** Choose **User Options > Fast Dials**. **2.** Click **Add New.** **3.** Change the Fast Dial code, if desired. **4.** Enter a phone number and click **Save**.
Assign a line button for Fast Dial	**Note** Before you can assign a line button for Fast Dial, your system administrator must configure the phone to display services. Contact your system administrator for more information. **1.** Choose **User Options > Device**. **2.** Click **Service URL.** **3.** From the Button drop-down list box, choose the **Fast Dial** service. **4.** Enter a phone label for the button and then click **Save**. **5.** To refresh the phone configuration, click **Reset** and then **Restart**. You can now press the line button to access the Fast Dial codes.
Search for a Fast Dial entry	**1.** Choose **User Options > Fast Dials**. **2.** Specify search information and click **Find**.

If you want to...	Then do this after you log in...
Edit a Fast Dial phone number	**1.** Choose **User Options > Fast Dials**. **2.** Search for the Fast Dial entry that you want to edit. **3.** Click on a component of the entry. **4.** Change the phone number and click **Save**.
Delete a Fast Dial entry	**1.** Search for a Fast Dial. **2.** Select one or more entries and click **Delete Selected**.

Tips

- You can create up to 500 Fast Dial and PAB entries.
- You can create a new Fast Dial entry without using a PAB entry. These Fast Dial entries are labeled "raw" in the User Options web pages and do not display a configurable text label.

Using the Address Book Synchronization Tool

You can use the Address Book Synchronization Tool (TABSynch) to synchronize your existing Microsoft Windows Address Book (if applicable) with your PAB. Entries from your Microsoft Windows Address Book will then be accessible on your Cisco Unified IP Phone and User Options web pages. Your system administrator can give you access to TABSynch and provide detailed instructions.

Setting Up Speed Dials on the Web

Depending on configuration, your phone can support several speed-dial features:

- Speed-dial buttons
- Abbreviated Dialing
- Fast Dials

Note For help using speed-dial features, see Speed Dialing, page 39.

If you want to...	Then do this after you log in...
Set up speed-dial buttons	**1.** Choose **User Options > Device**. **2.** From the Name menu, choose a phone and click **Speed Dials**. **3.** Enter a number and label for a speed-dial (programmable) button on your phone and click **Save**. **Note** Your phone uses the ASCII Label field.

If you want to...	Then do this after you log in...
Set up Abbreviated Dialing	**1.** Choose **User Options** > **Device**. **2.** From the Name menu, choose a phone and click **Speed Dials**. **3.** Enter a number and label for an Abbreviated Dialing code. **4.** Click **Save**.
Set up Fast Dials	See Configuring Fast Dials on the Web, page 73. You can also set up Fast Dials on your phone. See Using Personal Directory on Your Phone, page 66.

Setting Up Phone Services on the Web

Phone services can include special phone features, network data, and web-based information (such as stock quotes and movie listings). You must first subscribe to a phone service before accessing it on your phone.

If you want to...	Then do this after you log in...
Subscribe to a service	**1.** Choose **User Options** > **Device**. **2.** From the Name menu, choose a phone and click **Phone Services**. **3.** Click **Add New**. **4.** Choose a service from the drop-down list and click **Next**. **5.** Change the service label and/or enter additional service information, if available (optional). **6.** Click **Save**.
Search for services	**1.** Select a device. **2.** Click **Phone Services**. **3.** Click **Find**.
Change or end services	**1.** Search for services. **2.** Select one or more entries. **3.** Click **Delete Selected**.
Change a service name	**1.** Search for services. **2.** Click on the service name. **3.** Change the information and click **Save**.

If you want to...	Then do this after you log in...
Add a service to an available programmable phone button	**1.** Choose **User Options** > **Device**. **2.** Choose a phone from the Name drop-down menu. **3.** Click **Service URL**. **Note** If you do not see this option, ask your system administrator to configure a service URL button for your phone. **4.** Choose a service from the Button Service drop-down list. **5.** If you want to rename the service, edit the label fields and click **Save**. **Note** If your phone does not support double-byte character sets, it uses ASCII Label fields. **6.** Click **Save**. **7.** Click **Reset** to reset your phone (necessary to see the new button label on your phone).
Access a service on your phone	If only one service is configured, the service opens by default. If more than one service is configured, select an option from the menu on the screen. Select a service using one of these buttons: **Programmable phone button:** ( ) > **Services**. **Feature buttons:** Messages Services Directories **Note** The services available for your phone depend on the phone system configuration and the services you subscribed to. Ask your system administrator for more information.

Controlling User Settings on the Web

User settings include your password, PIN, and language (locale) settings.

If you want to...	Then do this after you log in...
Change your password	**1.** Choose **User Options > User Settings**. **2.** In the Browser Password area, enter information and click **Save.**
Change your PIN	**1.** Choose **User Options > User Settings**. **2.** In the Phone PIN area, enter information and click **Save.**
Change the language (locale) for your User Options web pages	**1.** Choose **User Options > User Settings**. **2.** In the User Locale area, choose an item from the Locale list and then click **Save.**
Change the language (locale) for your phone screen	**1.** Choose **User Options > User Settings**. **2.** Choose an item from the User Locale list and click **Save.**

Tip

Your PIN and password allow you to access different features and services. For example, use your PIN to log in to Cisco Extension Mobility or Personal Directory on your phone. Use your password to log in to your User Options web pages and Cisco WebDialer on your personal computer. For more information, ask your system administrator.

Controlling Line Settings on the Web

Line settings affect a specific phone line (directory number) on your phone. Line settings can include call-forwarding, voice message indicators, ring patterns, and line labels.

You can set up other line settings directly on your phone:

- Set up call forwarding for your primary phone line—see Forwarding Calls to Another Number, page 31.
- Change rings, display, and other phone-model specific settings—see Changing Phone Settings, page 59.

If you want to...	Then do this after you log in...
Set up call forwarding per line	**1.** Choose **User Options** > **Device**. **2.** From the Name menu, choose a phone and click **Line Settings**. **3.** If you have more than one directory number (line) assigned to your phone, choose a line from the Line drop-down menu. **4.** In the Incoming Call Forwarding area, choose call forwarding settings for various conditions and click **Save**.
Change the voice message indicator (lamp) setting per line	**1.** Choose **User Options** > **Device**. **2.** From the Name menu, choose a phone and click **Line Settings**. **3.** If you have more than one directory number (line) assigned to your phone, choose a line from the Line drop-down menu. **4.** In the Message Waiting Lamp area, choose from various settings and click **Save**. **Note** Typically, the default message waiting setting prompts your phone to display a steady red light from the handset light strip to indicate a new voice message.
Change the audible voice message indicator setting per line	**1.** Choose **User Options** > **Device**. **2.** From the Name menu, choose a phone and click **Line Settings**. **3.** If you have more than one directory number (line) assigned to your phone, choose a line from the Line drop-down menu. **4.** In the Audible Message Waiting Indicator area, choose from various settings and click **Save**. **Note** Typically, the default message-waiting setting prompts your phone to display a steady red light from the handset light strip to indicate a new voice message.
Change or create a line text label that appears on your phone screen	**1.** Choose **User Options** > **Device**. **2.** From the Name menu, choose a phone and click **Line Settings**. **3.** If you have more than one directory number (line) assigned to your phone, choose a line from the Line drop-down menu. **4.** In the Line Text Label area, enter a text label and click **Save**. (If the phone does not support a double-byte character set, it uses ASCII Label fields.)

Setting Up Phones and Access Lists for Mobile Connect

When using Mobile Connect, you must add your mobile and other phones that you want to use to make and receive calls using the same directory numbers as your desk phone. These phones are called *remote destinations*. You can also define access lists to restrict or allow calls from certain numbers to be sent to your mobile phone.

If you want to...	Then do this after you log in...
Create an access list	**1.** Choose **User Options > Mobility Settings > Access Lists**. **2.** Click **Add New**. **3.** Enter a name to identify the access list and a description (optional). **4.** Choose if the access list will allow or block specified calls. **5.** Click **Save**. **6.** Click **Add Member** to add phone numbers or filters to the list. **7.** Select an option from the Filter Mask drop-down list box. You can filter a directory number, calls with restricted caller ID (Not Available), or calls with anonymous caller ID (Private). **8.** If you select a directory number from the Filter Mask drop-down list box, enter a phone number or filter in the DN Mask field. You can use the following wild cards to define a filter: – X (upper or lower case)—Matches a single digit. For example, 408555123X matches any number between 4085551230 and 4085551239. – !—Matches any number of digits. For example, 408! matches any number starts with 408. – #—Used as a single digit for exact match. **9.** To add this member to the access list, click **Save**. **10.** To save the access list, click **Save**.

If you want to...	Then do this after you log in...
Add a new remote destination	**1.** Choose **User Options > Mobility Settings > Remote Destinations**. **2.** Click **Add New**. **3.** Enter the following information: – Name—Enter a name for the mobile (or other) phone. – Destination Number—Enter your mobile phone number. **4.** Select your remote destination profile from the drop-down list box. Your remote destination profile contains the settings that apply to remote destinations that you create. **5.** Select the **Mobile Phone** check box to allow your remote destination to accept a call sent from your desktop phone. **6.** Select the **Enable Mobile Connect** check box to allow your remote destination to ring simultaneously with your desktop phone. **7.** Choose one of the following options in the Ring Schedule area: – **All the time**—Choose this option if you do not want to impose day and time restrictions on ringing the remote destination. – **As specified below**—Choose this option and select from the following items to set up a ring schedule based on day and time: • Select a check box for each day of the week you want to allow calls to ring the remote destination. • For each day, select **All Day** or select the beginning and ending times from the drop-down lists. • Select the time zone from the drop-down list box. **8.** Choose one of these ringing options and click **Save**: – Always ring this destination. – Ring this destination only if the caller is in the allowed access list that you select. – Do not ring this destination if the caller is in the blocked access list that you select. (The ring schedule drop-down list boxes include only the access lists that you created.)

Using Cisco WebDialer

Cisco WebDialer enables you to make calls on your Cisco Unified IP Phone to directory contacts by clicking items in a web browser. Your system administrator must configure this feature for you.

If you want to...	Then...
Use WebDialer with your User Options directory	**1.** Log in to your User Options web pages. See Accessing Your User Options Web Pages, page 71. **2.** Choose **User Options > Directory** and search for a coworker. **3.** Click the number that you want to dial. **4.** If this is your first time using WebDialer, set up preferences on the Make Call page and click **Dial**. The call is now placed on your phone. (See the last row in this table to learn how to suppress this page in the future, if desired.) **5.** To end a call, click **Hangup** or hang up from your phone.
Use WebDialer with another online corporate directory (not your User Options directory)	**1.** Log in to a WebDialer-enabled corporate directory and search for coworkers. **2.** Click the number that you want to dial. **3.** When prompted, enter your user ID and password. **4.** If this is your first time using WebDialer, set up preferences on the Make Call page and click **Dial**. The call is now placed on your phone. (See the last row in this table to learn how to suppress this page in the future, if desired.) **5.** To end a call, click **Hangup** or hang up from your phone.
Log out of WebDialer	Click the logout icon in the Make Call or Hang Up page.

If you want to...	Then...
Set up, view, or change WebDialer preferences	Access the Make Call page. After you click the number that you want to dial, the page appears the first time you use WebDialer and contains these options: • Preferred language—Determines the language used for WebDialer settings and prompts. • Use preferred device—Identifies the Cisco Unified IP phone (calling device) and directory number (calling line) that you will use to place WebDialer calls: – If you have one phone with a single line, the appropriate phone and line are selected automatically, or you can choose a phone and/or line. – If you have more than one phone, it will be specified by device type and MAC address. (To display the host name on your phone, choose **> Network Configuration > Host Name**.) If you have an Extension Mobility profile, you can select your Extension Mobility logged-in device from the calling device menu. • Do not display call confirmation—If selected, prompts WebDialer to suppress the Make Call page. This page appears by default after you click a phone number in a WebDialer-enabled online directory.

Understanding Additional Configuration Options

Your system administrator can configure your phone to use specific button and softkey templates along with special services and features, if appropriate. This table provides an overview of some configuration options that you may want to discuss with your system administrator based on your calling needs or work environment.

You can locate phone guides and other documents listed in this table on the web: http://www.cisco.com/en/US/products/hw/phones/ps379/tsd_products_support_series_home.html

If you...	Then...	For more information...
Need to handle more calls on your phone line	Ask your system administrator to configure your line to support more calls.	Talk to your system administrator or phone support team.
Need more than one phone line	Ask your system administrator to configure one or more additional directory numbers for you.	Talk to your system administrator or phone support team.
Need more speed-dial buttons	First make sure that you are using all of your currently available speed-dial buttons. If you need additional speed-dial buttons, try using Abbreviated Dialing or subscribing to the Fast Dial service. Another option is to attach a Cisco Unified IP Phone Expansion Module to your phone. **Note** The Cisco Unified IP Phone 7945G does not support the Cisco Unified IP Phone Expansion Module.	See: • Speed Dialing, page 39. • *Cisco Unified IP Phone Expansion Module 7914 Phone Guide* • *Cisco Unified IP Phone Expansion Module 7915 Phone Guide* • *Cisco Unified IP Phone Expansion Module 7916 Phone Guide*
Work with (or work as) an administrative assistant	Consider using: • Cisco Unified CM Assistant • A shared line	See: • Using a Shared Line, page 43. • *Cisco Unified Communications Manager Assistant User Guide*

If you...	Then...	For more information...
Want to use one extension for several phones	Request a shared line. This enables you to use one extension for your desk phone and lab phone, for example.	See Using a Shared Line, page 43.
Share phones or office space with coworkers	Consider using: • Call Park to store and retrieve calls without using the transfer feature. • Call Pickup to answer calls ringing on another phone. • A shared line to view or join coworkers' calls. • Cisco Extension Mobility to apply your phone number and user profile to a shared Cisco Unified IP Phone.	Ask your system administrator about these features and see the: • Advanced Call Handling, page 39. • Using a Shared Line, page 43. • Using Cisco Extension Mobility, page 50.
Answer calls frequently or handle calls on someone's behalf	Ask your system administrator to set up the AutoAnswer feature for your phone.	See Using AutoAnswer with a Headset or Speakerphone, page 57.
Need to make video calls (SCCP phones only)	Consider using Cisco Unified Video Advantage, which enables you to make video calls using your Cisco Unified IP Phone, your personal computer, and an external video camera.	Contact your system administrator for additional assistance and see the *Cisco Unified Video Advantage Quick Start Guide* and *User Guide*.
Determine the state of a phone line associated with a speed-dial button, call log, or directory listing on your phone	Ask your administrator to set up the Busy Lamp Field (BLF) feature for your phone.	See Using BLF to Determine a Line State, page 46.
Want to temporarily apply your phone number and settings to a shared Cisco Unified IP Phone	Ask your system administrator about the Cisco Extension Mobility Service.	See Using Cisco Extension Mobility, page 50.

Troubleshooting Your Phone

This section provides troubleshooting information for your Cisco Unified IP Phone.

General Troubleshooting

This section provides information to help you troubleshoot general problems with your phone. For more information, see your system administrator.

Symptom	Explanation
You cannot hear a dial tone or complete a call	One or more of these factors may apply: • You must log into the Extension Mobility service. • You must enter a client matter code (CMC) or forced authorization code (FAC) after dialing a number. (SCCP phones only) • Your phone has time-of-day restrictions that prevent you from using some features during certain hours of the day.
The Settings button is unresponsive	Your system administrator may have disabled on your phone.
The phone screen appears blank	The phone screen has gone into sleep mode to save power after a period of inactivity. Wake the phone screen by pressing it, by lifting the handset, or by pressing any button, such as . See Cleaning and Maintaining the Phone Screen, page 17.
The softkey that you want to use does not appear	One or more of these factors may apply: • You must press **more** to reveal additional softkeys. • You must change the line state (for example, go off-hook or have a connected call). • Your phone is not configured to support the feature associated with that softkey.
Barge fails and results in a fast busy tone	You cannot barge an encrypted call if the phone you are using is not configured for encryption. When your barge attempt fails for this reason, your phone plays a fast busy tone.

Symptom	Explanation
You are disconnected from a call that you joined using **Barge**	You will be disconnected from a call that you have joined using **Barge** if the call is put on hold, transferred, or turned into a conference call.
CallBack fails	The other party may have call forwarding enabled.
The phone shows an error message when you attempt to set up Call Forward All	Your phone may reject your attempt to set up Call Forward All directly on the phone if the target number that you enter would create a Call Forward All loop or would exceed the maximum number of links permitted in a Call Forward All chain (also known as a maximum hop count). Ask your system administrator for details.
The phone screen does not illuminate under any circumstances	You may have disabled phone screen illumination on your phone. Contact your system administrator to determine if this feature is available to you.

Viewing Phone Administration Data

Your system administrator may ask you to access administration data on your phone for troubleshooting purposes.

If you are asked to...	Then...
Access network configuration data	Choose > **Network Configuration** and select the network configuration item that you want to view.
Access status data	Choose > **Status** and select the status item that you want to view.
Access phone model information	Choose > **Model Information**.
Access phone call and voice quality information	Choose > **Status** > **Call Statistics**.
Access VPN performance information related to the data transmitted and received	Choose > **Status** > **Network Statistics**.

Using the Quality Reporting Tool

Your system administrator may temporarily configure your phone with the Quality Reporting Tool (QRT) to troubleshoot performance problems. You can press **QRT** or **Quality Reporting Tool** to submit information to your system administrator. Depending on configuration, use the QRT to:

- Immediately report an audio problem on a current call.
- Select a general problem from a list of categories and choose reason codes.

Cisco One-Year Limited Hardware Warranty Terms

There are special terms applicable to your hardware warranty and various services that you can use during the warranty period. Your formal Warranty Statement, including the warranties and license agreements applicable to Cisco software, is available on Cisco.com at the following URL:

http://www.cisco.com/en/US/docs/general/warranty/English/1Y1DEN__.html

Index

A

Abbreviated Dialing 74
access list 79
Address Book Synchronization Tool 74
answering calls 24
ASCII label field support 74
audio problems 87
audio, quality of 7
authenticated calls 47
Auto Dial 21
AutoAnswer 57

B

barge
  and privacy 45
  and shared lines 43
  using 43
BLF 15, 46
BLF Pickup 2, 46
BLF Pickup, icon 15
Busy Lamp Field 46

C

call
  activity area 16
  forwarding
    configuring from the web page 77
    configuring on phone 31
  logs
    dialing from a URL entry within a log 64
    using, dialing from, and erasing 63
  overview mode 29
  park 41
  pickup 40
  waiting 25
CallBack 23
caller ID 16
call-handling
  advanced 39
  basic 21
calls
  answering 24
  barging 43
  blocking (using Do Not Disturb) 33
  compared to lines 14
  conference features 33
  ending 26
  forwarding 77
  handling multiple--viewing, switching, and holding 28
  holding and resuming 26
  icons 15
  multiple parties 33

muting 27
parking 41
placing 21, 22
prioritizing 49
redirecting while ringing 40
reporting problems with 87
secure 47
storing and retrieving 41
transferring 30
using DND 33
viewing 16, 29
Cisco Extension Mobility 50
Cisco Unified IP Phone
adjusting height of 7
connecting 5
feature configuration for 83
registering 7
securing handset rest 6
web-based services 71
Cisco Unified IP phone
feature configuration for 19
Cisco Unified IP Phone Expansion Module 42, 83
Cisco Unified IP phones
overview, illustrations, and buttons 9
Cisco Unified Video Advantage 84
Cisco WebDialer 81
Client Matter Code (CMC) 23, 85
conference calls
Meet-Me 36
security and viewing and removing participants 37
types 33
corporate directory
using from web page 22, 81
using on phone 22, 65

D

Details softkey, viewing multiparty calls 64, 65
device configuration page 71
dialing, options 21, 22
directed call park 41
Directories button 13
directory
corporate 65
personal 65, 66
using from web page 22, 81
using on phone 22, 65
display button 13
diverting calls to voice-message system 31
Do Not Disturb (DND) 33

E

EM 50
encrypted calls 47
ending a call, options 26
Extension Mobility 50

F

Fast Dials
configuring from web page 73
dialing 66
feature buttons
Directories 13

Help 13
Messages 13
Services 13
Settings 13
feature menus and button 18
features, availability of 83
features, available on your phone 19
footstand
adjusting 7
button for 12
Forced Authorization Code (FAC) 23, 85
forwarding calls, options 31

G

general use 7
GPickUp 40
greeting 25
group call pickup 40

H

handset
light strip 14
securing in cradle 6
using 55
hanging up, options 26
Headset
button 13
headset 7
answering calls 24
hanging up 26
placing calls 21
using 55
Help button 13, 29
help, using 19
hold
using 26
hold reversion feature, reverting calls 26
holding and transferring 30
hookswitch clip, removing 6
hunt groups, logging out 42

I

icons
for call states and lines 15
installing, Cisco Unified IP Phone 5
intercom
line idle, icon 15
line two-way call, icon 15
one-way call, icon 15
placing and receiving calls 37
international call logging 22, 65, 68

K

keypad 14

L

language (locale) settings 77
line buttons 12
lines
and call forwarding 77
and using BLF 46

buttons 12
description and number of supported calls 14
icons and call states 15
number of calls supported on 83
ring patterns for 77
ring tones for 59
shared 43
switching between 28
text label for 77
viewing 16
voice message indicator setting for 77
logging out of hunt groups 42

M

Malicious Call Identification 49
MCID 49
Meet-Me conferences 36
menus, using 18
messages
indicator for 60, 69
listening to 69
Messages button 13
missed calls, records 63
MLPP, using 49
mobile connect
access to remote destinations 53
enabling 80
setting up access lists 79
mobile voice access 52
multiparty calls
identifying in call logs 64
viewing details 64, 65
multiple calls, handling 28
Mute button 13
mute, using 27

N

Navigation button 14
network configuration data, locating 85

O

on-hook dialing 21
online help, using 19
OPickUp 40
other call pickup, using 40

P

park retrieval prefix 42
password, changing 77
Personal Address Book (PAB)
using from web page 72
using on phone 66
Personal Directory (PD)
using from web page 72
using on phone 66
phone lines
description and number of supported calls 14
viewing 16
phone screen 13
adjusting contrast 60
changing language 60
cleaning 17

illumination setting 61
illustration and features 16
sleep mode 17
phone screens
cleaning, maintaining, and sleep mode 17
phone services
configuring 72
see also User Options web pages 72
PIN, changing 77
placed calls, records 63
placing calls, options 21, 22
pre-dialing (dialing on-hook) 21
prioritizing calls 49
privacy
and shared lines 43
using 45
programmable buttons
description 12
labels 16

Q

Quality Reporting Tool (QRT) 87

R

received calls, records 63
redialing 21
remote destination 52
creating 80
ring schedule 80
turn off access 53
remote-in-use icon for shared lines 43
resume, using 26
ring patterns, changing 77
ring schedule for remote destinations 80
ring tones, changing 59
ringer
customizing 59
indicator 14
volume for 59

S

safety, warnings 2
SCCP versus SIP protocol 20
secure calls 47
Select button 14
Services button 13
services, subscribing to 75
Session Handoff 28
Settings button 13
settings, customizing 59
shared lines
and remote-in-use icon 43
description of 43
with barge 43
with privacy 45
SIP versus SCCP protocol 20
sleep mode, waking phone screen 17
sleep mode, waking phone screen from 17
softkey buttons
description 14
labels 16
Speaker
button 13

speakerphone
  answering calls 25
  hanging up 26
  placing calls 21
  using 55
speed dial
  buttons 12
  configuring 74
  labels 16, 74
  using 22
  using BLF with 39
status data, locating 85
status line, viewing 16
subscriptions, for phone services 75
suspicious calls, tracing 49
switching between multiple calls 28
switching calls 28, 52

T

tabs, on phone screen 16
TABSynch 74
TAPS 7
Tool for Auto-Registered Phones Support 7
touchscreen 17
transferring, options 30
troubleshooting 85

U

URL dialing, from within a call log 64
User Options web pages
  accessing 71
  configuring features and services with 72
  subscribing to phone services with 75

V

voice message indicator
  changing setting 77
  description of 69
voice message service 69
Volume button 13
volume, for phone ringer 59

W

warnings, safety 2
web-based services
  configuring 71
  see also User Options web pages
WebDialer 22, 81
wideband, headset 56

Americas Headquarters
Cisco Systems, Inc.
San Jose, CA

Asia Pacific Headquarters
Cisco Systems (USA) Pte. Ltd.
Singapore

Europe Headquarters
Cisco Systems International BV
Amsterdam, The Netherlands

Cisco has more than 200 offices worldwide. Addresses, phone numbers, and fax numbers are listed on the Cisco Website at **www.cisco.com/go/offices.**

Cisco and the Cisco Logo are trademarks of Cisco Systems, Inc. and/or its affiliates in the U.S. and other countries. A listing of Cisco's trademarks can be found at www.cisco.com/go/trademarks. Third party trademarks mentioned are the property of their respective owners. The use of the word partner does not imply a partnership relationship between Cisco and any other company. (1005R)

© 2010 Cisco Systems, Inc. All rights reserved.